Technical Note on Accessibility

The Technical References

4

WORLD BANK GROUP

HUMAN RIGHTS
INCLUSION
EMPOWERMENT

Inside front cover

Technical Note on Accessibility

Part 4: The Technical References

WORLD BANK GROUP

HUMAN RIGHTS
INCLUSION
EMPOWERMENT

1818 H Street NW
Washington DC 20433
Telephone: 202-473-1000
Internet: www.worldbank.org

Rights and Permissions

Attribution - Please cite the work as follows: “World Bank. 2022. Technical Note on Accessibility. Washington, DC: World Bank.”

Cover photo: [© ThamKC, Shutterstock.]

This guidance is one of **four sets of documents constituting the World Bank Technical Note on Accessibility.** It is primarily meant for the Bank's task team leaders (TTLs), program implementing units (PIUs) and E&S specialists. The note can be also used by other development partners, including World Bank clients. It focuses on investment project financing (IPF).

The sections that comprise the **Technical Note on Accessibility** are: **The Narrative (Part 1); The Project Cycle Guidance (Part 2); The Five Thematic Fact Sheets (Part 3); and The Technical References (Part 4).**

Table of Contents

1

Introduction to the Technical References

WORLD BANK GROUP


Photo: © Mari Koistinen, World Bank

As explained in the Narrative (Part 1), accessibility standards can be local, national, regional, or international. National standards can be more or less detailed, and they can be more or less binding, depending upon the level of approval they have obtained from national authorities.

For example, in some countries, accessibility standards have only been developed and published by the local Ministry of Public Works: in that case they are strongly recommended and advocated for. In other countries, however, standards have been officially adopted by the government, and the perimeter of their use is defined in a legal decree detailing what types of infrastructure are concerned, with what deadlines, etc. As a general rule, **whenever national accessibility standards are available,** the World Bank encourages projects to comply with them as much as possible, while allowing for some flexibility when appropriate, especially when other standards are more stringent. Examples of national accessibility standards are:

- ✓ **The British Building Regulations for Access to and Use of Buildings**
- ✓ **The ADA Standards for Accessible Design**
- ✓ **The Dubai Universal Design Code**

When national accessibility references are not available, countries with similar contexts or strongly connected can refer to the same accessibility standards to a certain extent.

For example, East African countries sometimes use British standards as the most relevant applicable reference.

However a neutral and international set of accessibility standards exists as well, and it should be considered as the most universal reference, to be used whenever national standards are not available. The **ISO 21542:2021, Building Construction - Accessibility and Usability of the Built Environment** can be used as such, or integrated with other standards if needed.

These Accessibility Technical References do not mean to promote one standard over another. The purpose of this guidance is rather to identify the elements that are most frequently defined by accessibility standards, and to clarify the reasons behind these standards which can slightly vary from country to country. TTLs and PIUs will then need to choose which standard is most appropriate for their purposes, according to the specific context and the legal framework.

NOTE: The references provided here only refer to infrastructure, buildings, external areas, transportation, and mobility.

Photo: © mhrezaa, Unsplash

2

Reach

WORLD BANK GROUP

2.A. Pavement - Characteristics

- Pedestrian sidewalks or pavements should be flat and even, realized with firm, anti-glare and anti-slip materials, with no holes or other obstacles, open trenches, abrupt changes in level, steps, etc.
- Pavements must be large enough to allow simultaneous circulation of at least one ambulant person and one person using a wheelchair.
- They should be differentiated from cycle and vehicle lanes by the use of color or texture, and they should be separated from them with physical protections (e.g. bollards, raised curbs, plants).

Source: Erika Trabucco

Source: Erika Trabucco

2.B. Pavement - Protections

- Whenever there is a dangerous change of level on the side of a footpath that might endanger persons who are blind or who use a wheelchair, an alert or a physical separation should be provided.
- Recommendations for exactly how to do this vary slightly from standard to standard.

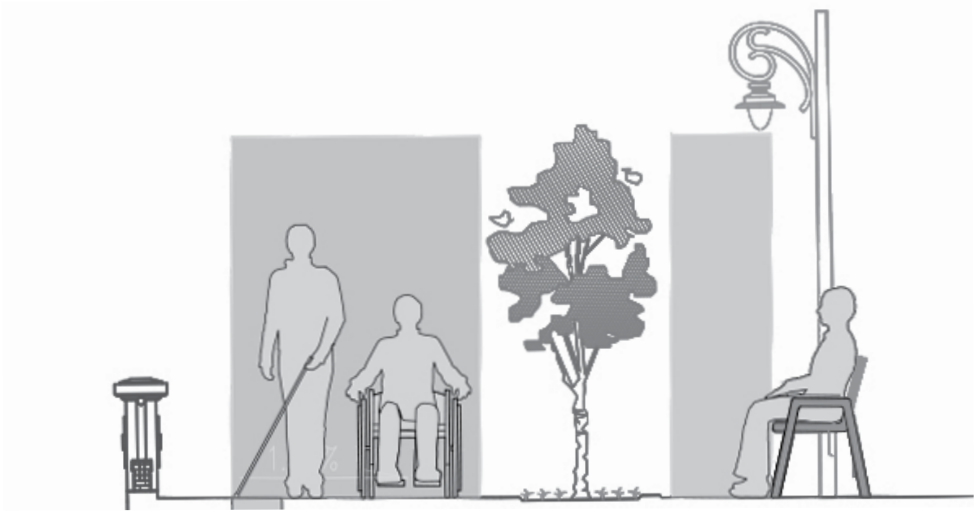

Source: World Bank. 2020. Urban accessibility design guideline incorporating universal accessibility into infrastructure planning and design (Figure 5.6)

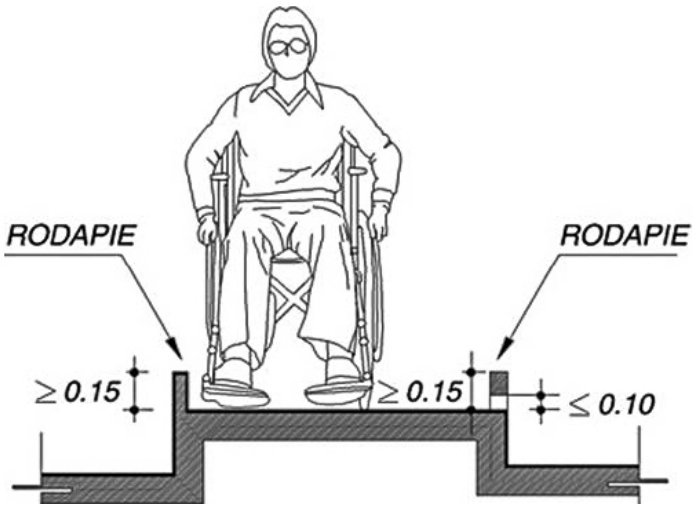

© IBNORCA (Norma Boliviana. 2013. NB 1220003. Accesibilidad de las personas con discapacidad al medio físico. Edificios y espacios urbanos - Equipamientos - Rodapiés, pasamanos, barandas y agarraderas. Figura 1.)

2.C. Pavement - Curb Ramps

- Curb ramps and cuts allow persons with mobility impairments and persons using a wheelchair to get safely from a raised pavement to the street level (and the other way around as well).
- They should have a gentle slope and flared sides, so as not to create an obstacle for persons with visual impairments. If the sides are not flared, they must be protected with a raised curb.

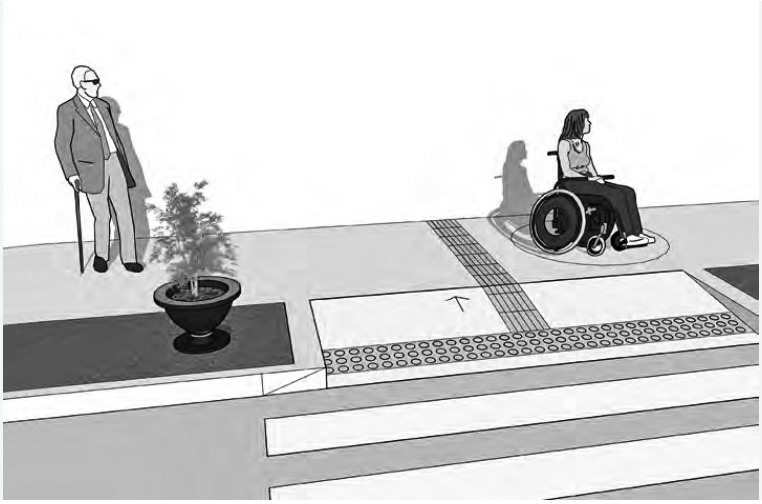

Source: Acceplan Accesibilidad S.L. (World Bank. 2020. Urban accessibility design guideline incorporating universal accessibility into infrastructure planning and design. Figure 5.17)

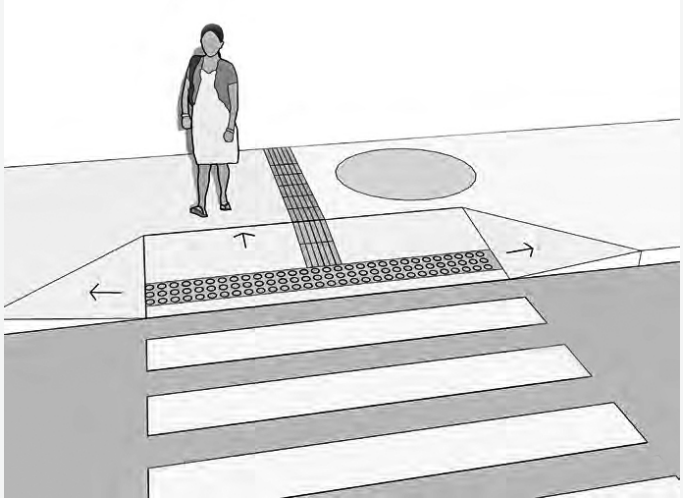

Source: Acceplan Accesibilidad S.L. (World Bank. 2020. Urban accessibility design guideline incorporating universal accessibility into infrastructure planning and design. Figure 5.18)

- To be usable, curb cuts should also end at the same level as the street, without thresholds or steps.
- They should be marked with a tactile strip to indicate to persons who are blind that they have to stop and pay attention to cars coming by.

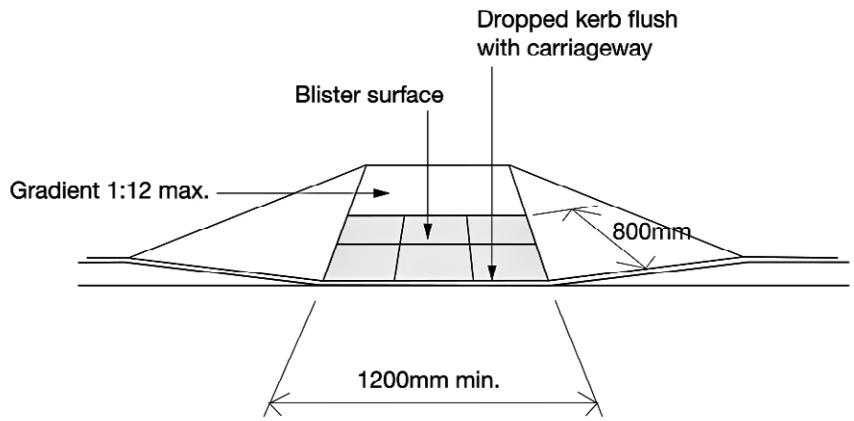

Dropped kerb at an uncontrolled crossing

© Crown Copyright 2021 (HM Government, The Building Regulations 2010, Access to and use of buildings, volume 2. Buildings Other than Dwellings. Diagram 1)

2.D. Pavement - Raised Pedestrian Crossings

- Raised pedestrian crossings, or speed tables, are being used more and more to induce drivers to reduce their speed and increase pedestrian safety (for example in Australia, Canada, and France); they are also an effective alternative to curb ramps for persons with disabilities.
- By gently raising a section of the road to the height of sidewalks at a crossing, persons with disabilities no longer need curb ramps; at the same time all pedestrians are safer because vehicles are forced to reduce speed, and they are alerted to do so by very clear visual markings on the asphalt.
- There should be a tactile strip at both sides of a raised pedestrian crossing.

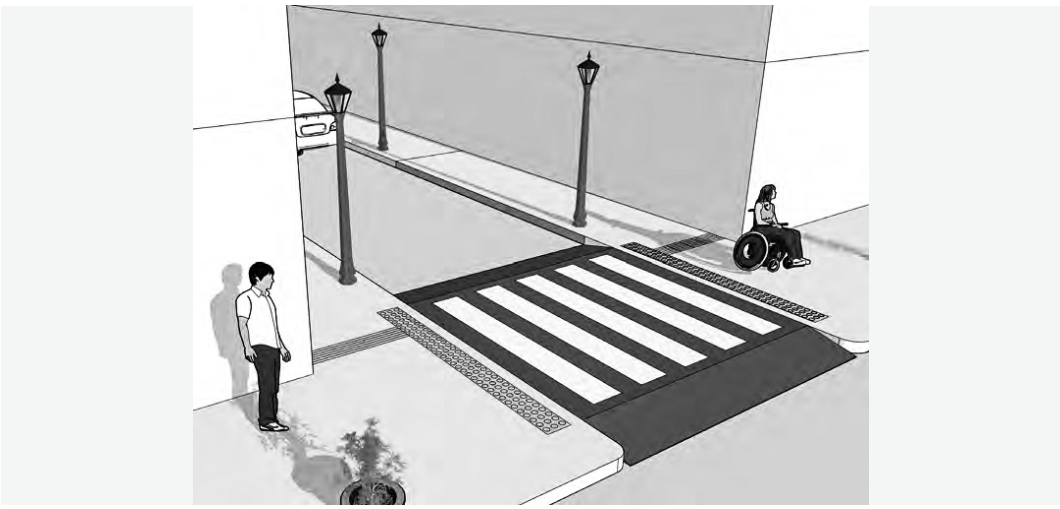

Source: Acceplan Accesibilidad S.L. (World Bank. 2020. Urban accessibility design guideline incorporating universal accessibility into infrastructure planning and design. Figure 5.14)

Source: shutterstock_1904810413

2.E. Pavement - Pedestrian Bridges

- Pedestrian bridges for crossing high- traffic roads should have an accessible elevator or, alternatively, accessible ramps.
- These bridges should ensure the simultaneous movement of two persons going in different directions, including one person using a wheelchair or another type of walking aid such as crutches or walkers.

© Crown copyright, 2008, 2010, 2011 and 2015 (Department of Transport. 2015. Design Standards for Accessible Railway Stations. A joint Code of Practice by the Department for Transport and Transport Scotland. Figure W1.1)

2.F. Pavement - Access to Garages

- Vehicle access to a garage that crosses a public pavement should not cut the pavement or create sloping sides; the pavement should be flat, even and continuous, and an appropriate curb cut should be created on the side of the pavement instead.
- It is also important to include some form of alert (for example, tactile strips on the pavement) before and after persons with disabilities - in particular persons who are blind or who have other visual impairments-cross the vehicle access area.

2.G. Pavement - Grids and Holes

- Routes must be usable, with no obstacles for wheels, walking sticks, or feet to slip into; and they must be equipped to allow public spaces to be used and crossed safely by everyone. This means that holes and gaps on the ground resulting from the presence of grids or other fittings must be no more than 1.3 centimeters wide, so as not to represent an obstacle for persons using canes, the wheels of wheelchairs, or persons wearing high heels.
- In particular, grids with parallel gaps should be installed so that the gaps are perpendicular to the main direction of pedestrian traffic so that the wheels of a wheelchair will not get stuck in them.

Source: World Bank. 2020. Urban accessibility design guideline incorporating universal accessibility into infrastructure planning and design.

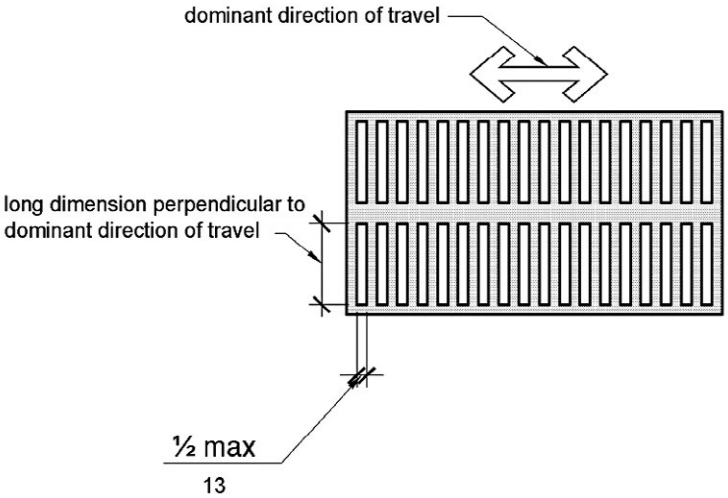

Source: Department of Justice. 2015. 2010 ADA Standards for Accessible Design. United States (Figure 302.3)

2.H. Parking Bays - Side Aisle

- Accessible parking lots should leave a side aisle free so that persons using a wheelchair or other mobility aids can safely and comfortably get into and out of their cars.
- Side aisles should lead to an accessible curb cut or ramp onto an accessible pathway.

- Accessible parking lots should leave a side aisle free so that persons using a wheelchair or other mobility aids can safely and comfortably get into and out of their cars.

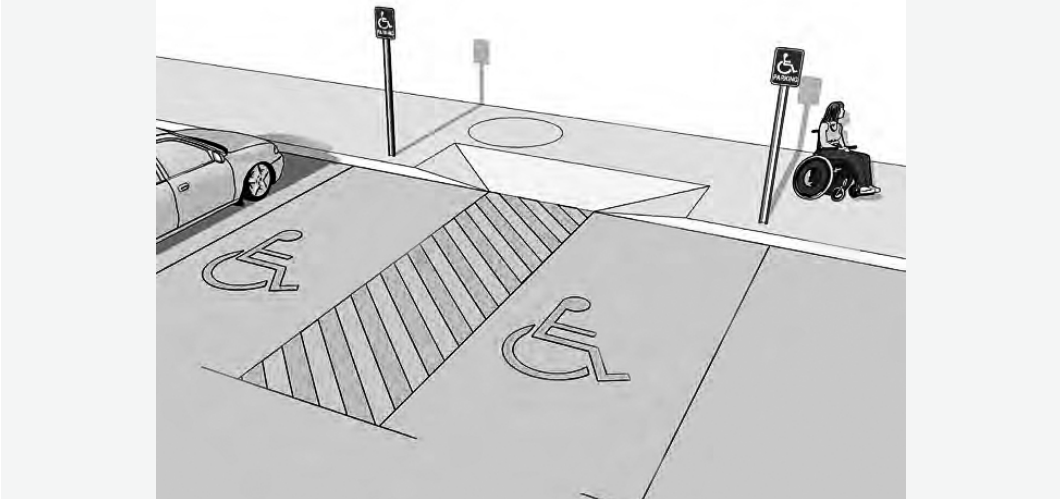

Source: Acceplan Accesibilidad S.L. (World Bank. 2020. Urban accessibility design guideline incorporating universal accessibility into infrastructure planning and design. Figure 5.27)

Source: Mari Helena Koistinen

2.I. Parking Bays - Front Aisle

- Some standards include a free zone in front of the accessible parking lot in order to facilitate on/off loading. This is particularly relevant in the case of parking lots surrounded by walls.

- The back aisle is also useful for a person using a wheelchair to get into the car from the back (of adapted accessible vehicles).

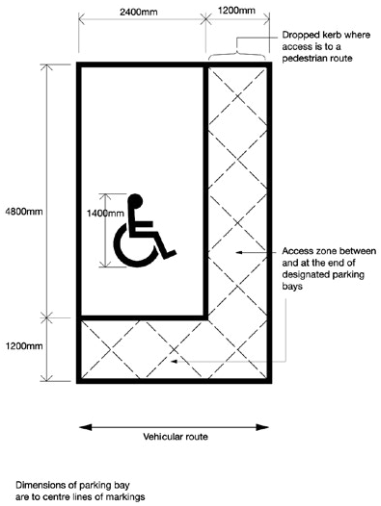

© Crown Copyright 2021 (HM Government, The Building Regulations 2010, Access to and use of buildings, volume 2. Buildings Other than Dwellings. Diagram 2)

© Crown copyright, 2008, 2010, 2011 and 2015 (Department of Transport. 2015. Design Standards for Accessible Railway Stations. A joint Code of Practice by the Department for Transport and Transport Scotland. Figure C1.2)

2.J. Mobility - Infrastructure

- Large mobility infrastructure must comply with the general requirements for all facilities.

- Bus stops should be connected to an accessible pathway; clearly signposted in multiple formats (visual, tactile, audio); be provided with sheltered seating; and have spaces for persons using a wheelchair. If the bus stop is raised it must be provided with an accessible ramp.
- Ticket machines should be provided with tactile and/or braille information and, be at a convenient height for persons of short stature, children, or persons using a wheelchair.

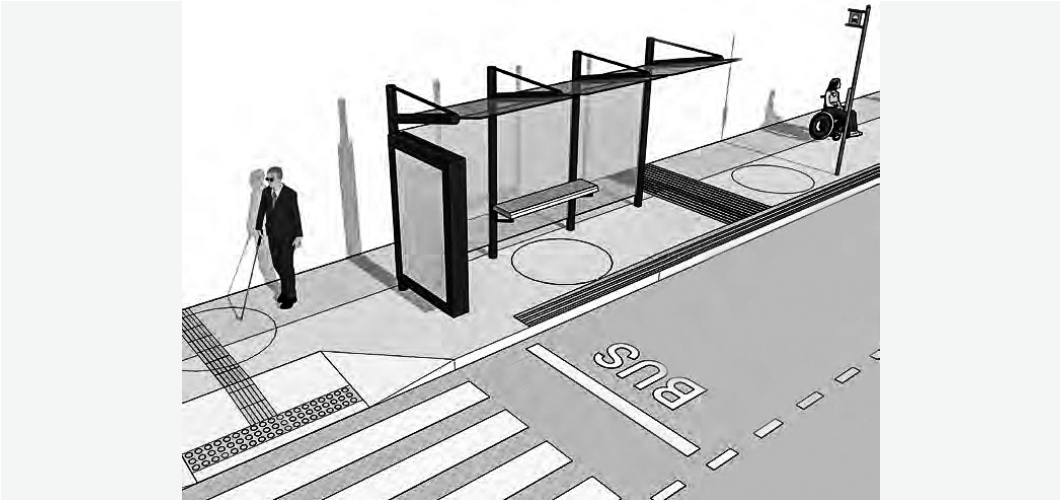

Source: Acceplan Accesibilidad S.L. (World Bank. 2020. Urban accessibility design guideline incorporating universal accessibility into infrastructure planning and design. Figure 5.22)

Source : Rafael Castillo (flickr)

- Turnstiles or other barriers must include an accessible passage for persons using a wheelchair.
- Information booths in stations, airports, etc. should have an accessible counter at an appropriate height, hearing enhancements, and printed information available in multiple formats, including braille, etc.
- Accessible seats and resting places should be provided in the waiting areas of bus/train/metro stations and in other mobility hubs.

© Crown copyright, 2008, 2010, 2011 and 2015 (Department of Transport. 2015. Design Standards for Accessible Railway Stations. A joint Code of Practice by the Department for Transport and Transport Scotland. Figure N3.1)

© Crown copyright, 2008, 2010, 2011 and 2015 (Department of Transport. 2015. Design Standards for Accessible Railway Stations. A joint Code of Practice by the Department for Transport and Transport Scotland. Figure N1.1 and N1.2)

© Crown copyright, 2008, 2010, 2011 and 2015 (Department of Transport. 2015. Design Standards for Accessible Railway Stations. A joint Code of Practice by the Department for Transport and Transport Scotland. Figure T1.1)

2.K. Tactile Indicators (TWSI) - Metro/Train Stations

- Platforms of train/metro/bus/tram stations should be marked with a continuous tactile strip in order to alert persons who are blind that they cannot walk past it. This strip should also be in a color that contrasts with the rest of the floor, so that it's also clearly visible for persons with visual impairments.
- A different type of tile should also mark the position where the doors to get on the train or metro will open.

Source: shutterstock_1507709129

2.L. Mobility - Entering Transport Means

- Ideally the pavement should be level with the internal floor of the vehicle.
  If there is a difference in levels, all transport vehicles, regardless of the type, should be provided with movable ramps that can smoothly connect the pavement to the floor of the vehicle.
- It is very important to train drivers and support personnel, for example on ferries and trains, in such a way that they can help passengers avoid accidents even to the extent of assisting persons with disabilities who must go up or down a ramp.

Source: shutterstock_1835818411

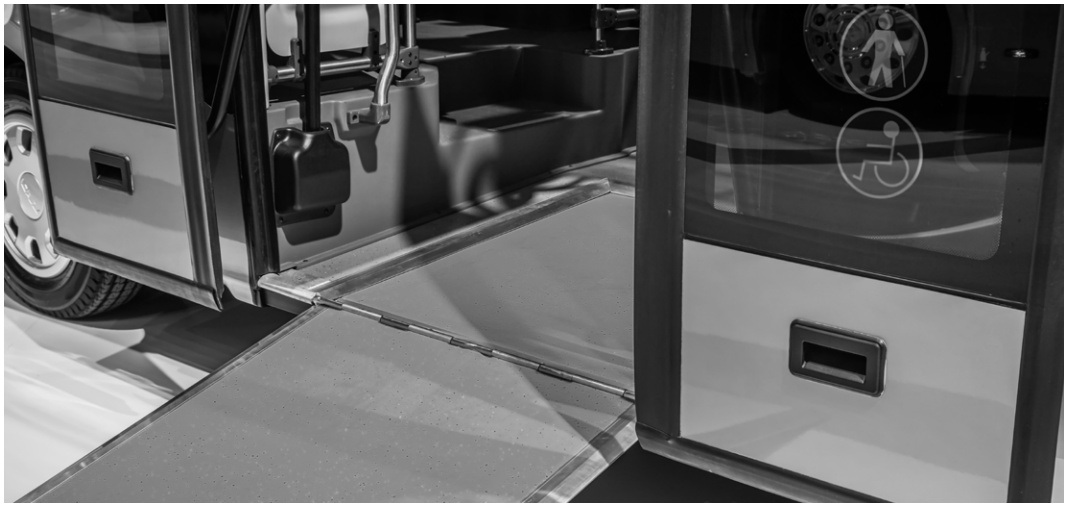

Source: shutterstock_2041186046

2.M. Mobility - Gaps at Entry Point

- If there are gaps between the internal floor of a bus or train and the pavement, even when the internal and external floors are at the same level, the gaps should be covered with flat movable flaps that do not create an obstacle.
- If the flaps are not automated, drivers should be trained in how to use them, and on how to help persons with disabilities who need extra support.

Source: shutterstock_250937827

2.N. Mobility - Use of Transport Means

- There should be enough internal space to allow a person who is using a wheelchair, or a person who is using a guide dog to maneuver safely.
- Accessible spaces in public transportation vehicles should be close to the doors, maps, press buttons, alarm devices, information about the next stop, and should be clearly marked.
- Spaces for persons using a wheelchair should be provided with security belts.
- Toilets on public transportation vehicles should be accessible for persons with disabilities. This means, for example, that they should be large enough for a person using a wheelchair to enter and use the lavatory; and equipped with grab rails and emergency buttons.
- The doors to accessible toilets should be clearly marked with the universal symbol of accessibility.

2.0. Mobility - Communication

- Alerts regarding next stop, direction, number of the bus/train, from which platform a bus will leave, schedules, changes in schedule, etc. should be conveyed in multiple formats, including audio, video, and braille.
- Transport infrastructure, like all other public facilities, should be equipped with accessible wayfinding systems (directional and signposting).

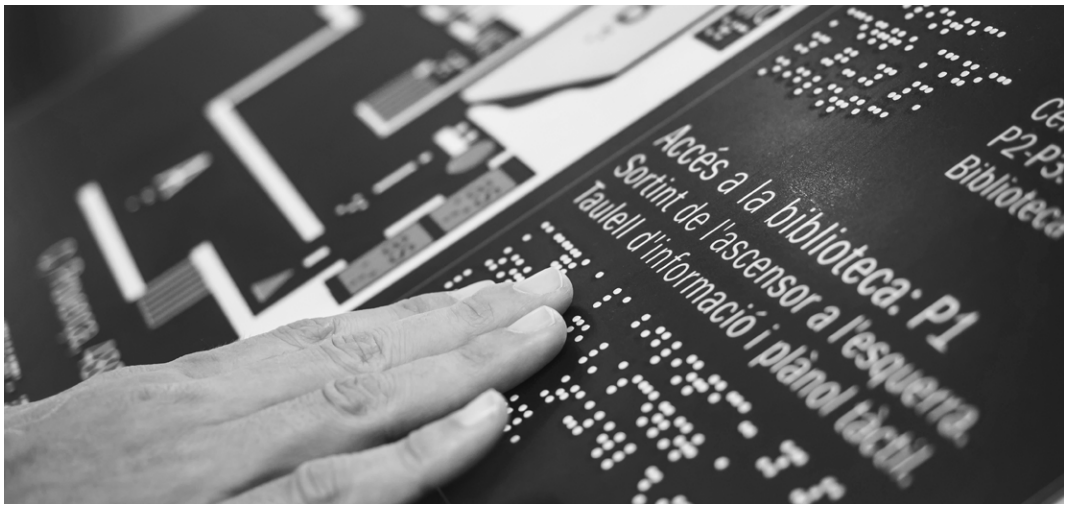

Source: shutterstock_1293310804

© Crown copyright, 2008, 2010, 2011 and 2015 (Department of Transport. 2015. Design Standards for Accessible Railway Stations. A joint Code of Practice by the Department for Transport and Transport Scotland. Figure J2.1)

© Crown copyright, 2008, 2010, 2011 and 2015 (Department of Transport. 2015. Design Standards for Accessible Railway Stations. A joint Code of Practice by the Department for Transport and Transport Scotland. Figure K6.1)

3

Enter

WORLD BANK GROUP

3.A. Ramps - Slope

- When there is a difference in level along a path, for example between the street and the raised entrance to the path, a ramp as well as steps should be in place, in order to ensure a continuous chain of movement for persons with disabilities.
- Ramps must always have a gentle slope: if the ramp is too steep, it will require too much strength from persons using a wheelchair. Furthermore, when going down the ramp, a slope that is too steep creates a risk that persons could lose control of the wheelchair and hurt themselves, or even capsize the chair.
- A ramp's slope is measured either as a grade (%) or as a ratio. The higher the grade, the more dangerous the ramp.
- The maximum grade for a ramp is 8% (or 1 in 12); some standards prefer a lesser grade (5%, or 1 in 20) which is much easier to manage, and safer.
- Overall, whenever possible the lower grade should be chosen, even if the local standard allows for steeper slopes.

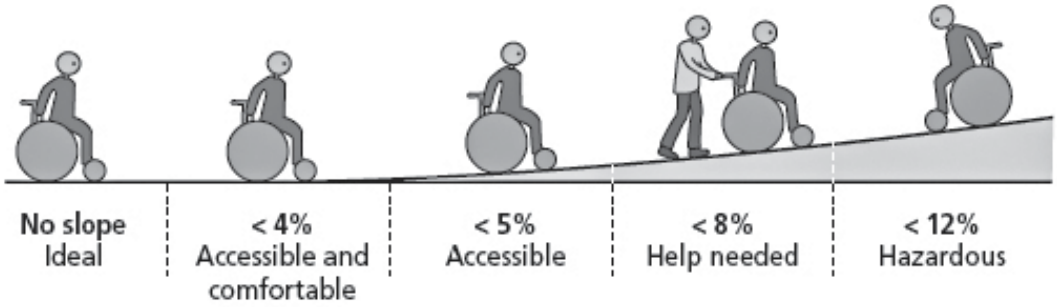

© Handicap International – French Section 2009 (Handicap International. 2009. How to build an accessible environment in developing countries. Accessibility in remote areas and difficult context -Cases studies in Burmese Border Camps, Thailand)

3.B. Ramps - Shape

- Ramps can be straight, L-shaped or U- shaped according to the needs and the difference in levels. Curved ramps should be avoided because they can be dangerous.
- When the difference in levels is minimal, a portable ramp made of metal or wood, can be provided to be used when needed, instead of building a permanent one. This option, however, is not recommended whenever a permanent ramp can be built.

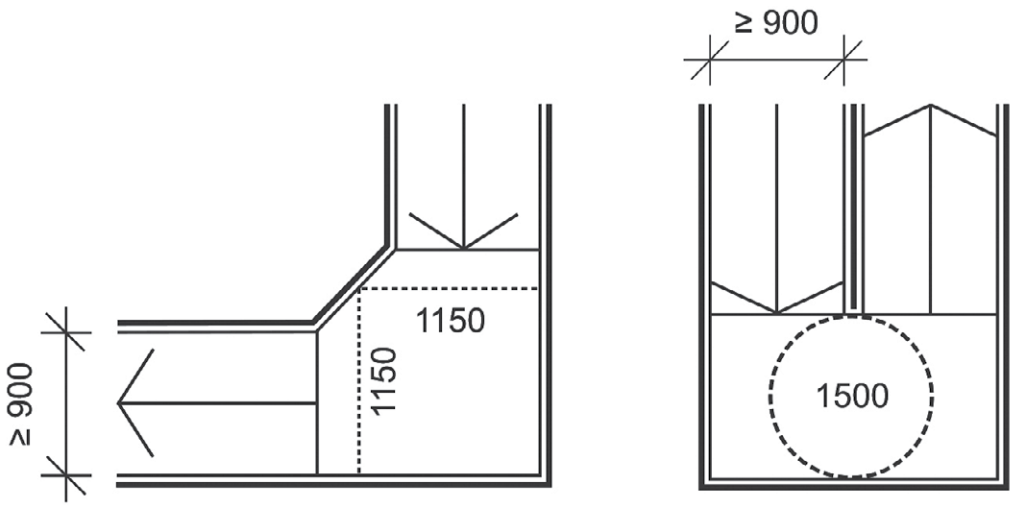

Source: The Threshold Association. 2014. Accessibility Guide. Finland.

Source : Erika Trabucco

3.C. Ramps - Design

- Ramps should be made of anti-slip, nonreflecting materials that are wide enough to allow comfortable use by persons using a wheelchair; this is generally considered to be between 120 and 150 cm.
- They should have handrails on both sides and on the external side(s) the handrail should come with a small curb that prevents the wheels of a wheelchair or the cane of a blind person sliding over the side of the ramp.

- Unlike the ISO standard, some standards require tactile strips before and after a ramp as well (not only before and after steps) for persons who are blind and who prefer to use ramps rather than stairs.

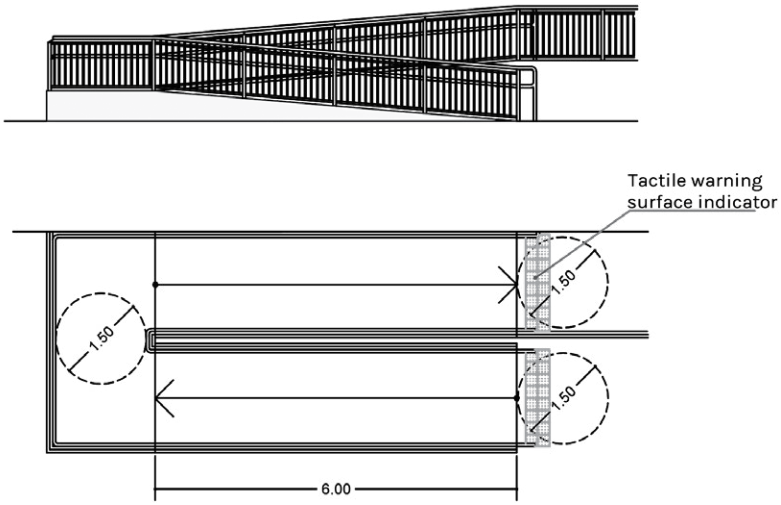

Source: World Bank. 2020. Urban accessibility design guideline incorporating universal accessibility into infrastructure planning and design. Figure 5.1.

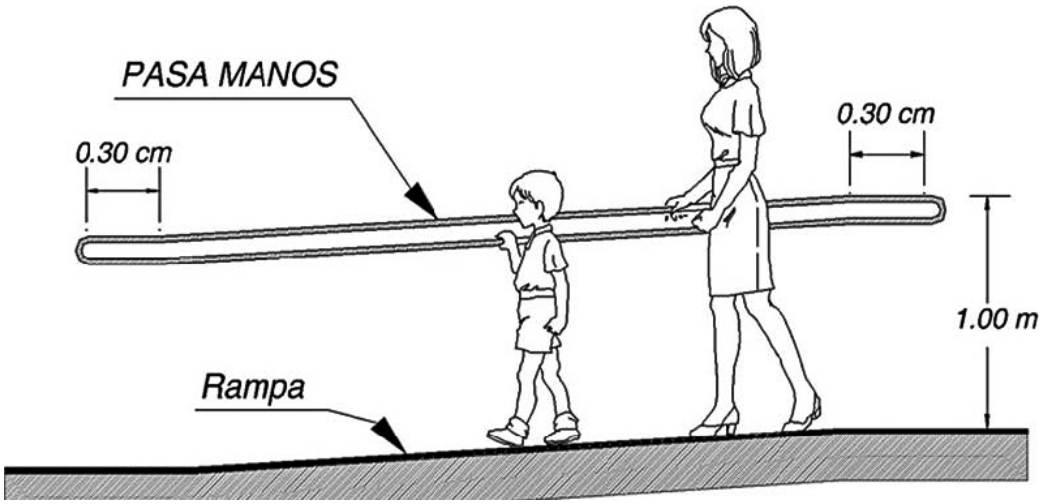

© IBNORCA (Norma Boliviana. 2013. NB 1220002. Accesibilidad de las personas con discapacidad al medio físico. Edificios. Escaleras. Figura 3.)

3.D. Ramps - Intermediate Landings

- When a ramp is too long it is difficult to use and can be dangerous, even if its slope is gentle.

- Intermediate horizontal landings should split long ramps into sections to allow for resting time (when going up) or to control the speed of the wheelchair (when going down).
- Landings should be large enough to allow a wheelchair to stay still with no effort, and ideally to make a U-turn.
- The maximum distance allowed between landings depends on the steepness of the ramp, and differs from standard to standard.

Type	*Slope*	*Maximum length*
Smooth slope	< 5%	12 m
Medium slope	5% - 8%	6 m
Steep slope	8% - 12%	3 m
Extra steep slope	> 12 %	50 cm

© Handicap International – French Section Handicap International. 2008. How to build an accessible environment in developing countries. Manual #1 – Introduction & Accessibility standards. Cambodia

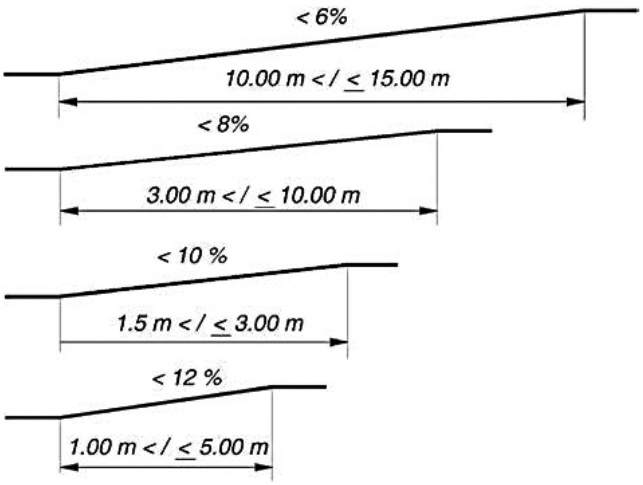

© IBNORCA (Norma Boliviana. 2013. NB 1220005. Accesibilidad de las personas con discapacidad al medio físico. Edificios y espacios urbanos Rampas fijas adecuadas y básicas. Figura 1.)

3.E. Ramps - Landings

- A ramp must always begin and end with a horizontal landing large enough for maneuvering wheelchairs.
- If a door opens outward onto the landing, when the door is open it has to leave sufficient maneuvering space on the landing.
- Under no circumstances can a ramp end or begin directly onto a door, without a horizontal landing. In such a case a person using a wheelchair would have to open the door while at the same time preventing the wheelchair from sliding down, and persons using crutches would risk losing their balance while opening the door from the sloped surface.
- Also, persons with visual impairments would find it difficult not to collide with a door that opens directly onto the ramp.

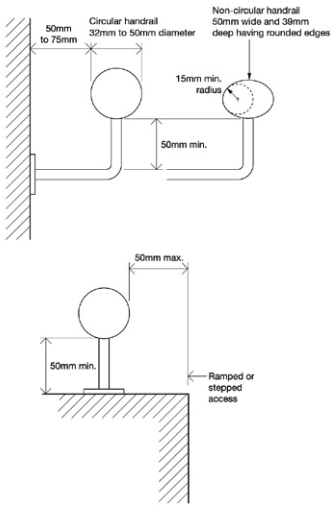

© Crown Copyright 2021 (HM Government, The Building Regulations 2010, Access to and use of buildings, volume 2. Buildings Other than Dwellings. Diagram 7)

3.F. Ramps - Handrails

- Handrails are a means of support, stability, and guidance for the user. They should be located on sloped paths, steps, ramps, and stairs, and should be continuous, so that the hand holding the rail can be guided without interruption.
- Handrails should be smooth, circular, and designed so that the hand can slide along with no interruption. Metal handrails should be avoided outdoors, because they can become very hot or very cold, depending on the climate.
- Although standards differ, it is recommended that handrails should be provided at

two different heights to accommodate the needs of adults, children, persons using a wheelchair, persons of small stature, etc.

- Handrails should be in a color that contrasts with the wall, in order to be more visible to people with visual impairments. They should also extend 30 cm after the end of the ramp or the flight of stairs.

Source: shutterstock_551070733

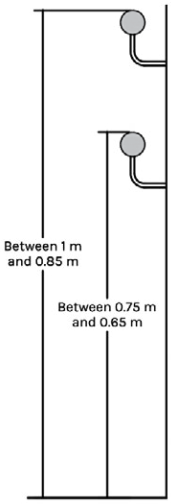

Source: World Bank. 2020. Urban accessibility design guideline incorporating universal accessibility into infrastructure planning and design. Figure 5.3.

3.G. Doors - Glazed Doors and Partitions

- Glazed doors, especially if they are not automated, should have opaque and colored

stripes at two different heights, in order to alert persons with visual impairments that there is a transparent obstacle in front of them.

- The color of the stripes or visual marks should contrast with the background colors, so that persons with visual impairments have no difficulty in detecting them.
- The height, width, and other prescriptions for these visual marks differ from standard to standard. Some allow different shapes of visual marks, provided that they cover more than a certain percentage of the glazed surface.

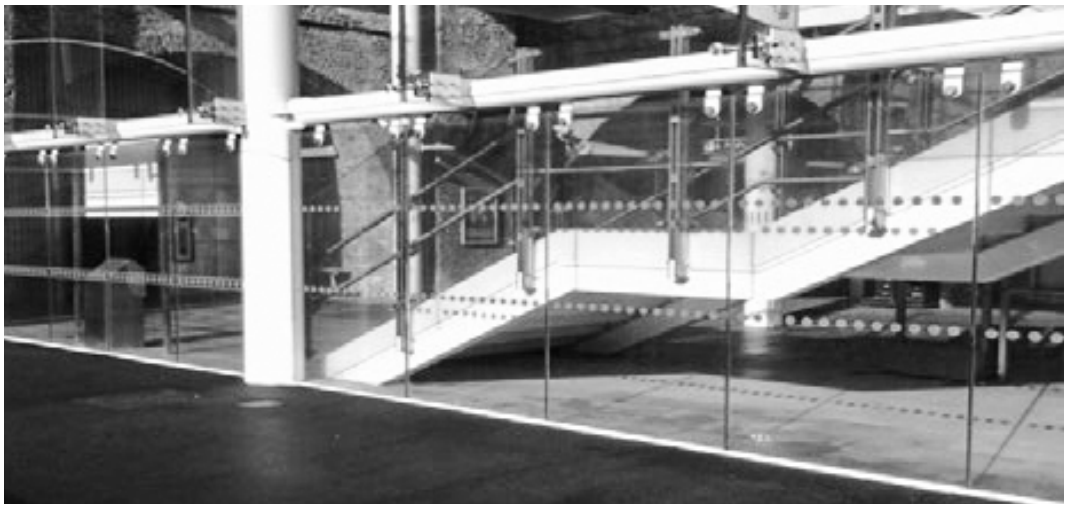

© Crown copyright, 2008, 2010, 2011 and 2015 (Department of Transport. 2015. Design Standards for Accessible Railway Stations. A joint Code of Practice by the Department for Transport and Transport Scotland. Figure J1.1)

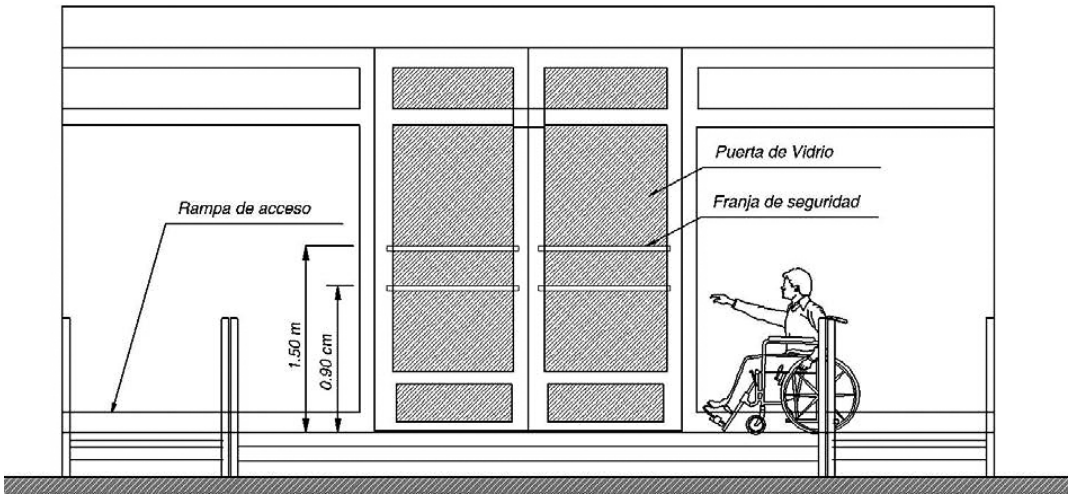

© IBNORCA (Norma Boliviana. 2013. NB 1220013. Accesibilidad de las personas con discapacidad al medio físico - Edificios - Puertas accesibles. Figura 8.)

3.H. Reception Areas

- Reception areas should be equipped with a dual-height counter to facilitate persons of small stature or persons using a wheelchair.
- These areas should also be large enough to allow circulation and maneuvering of persons using a wheelchair or other walking aids.
- They should be equipped with resting seats and clear signs, both to identify the reception counter and to orient visitors to the service they need.
- Reception areas should be close to an accessible toilet, and clearly signposted with the international symbol of accessibility.

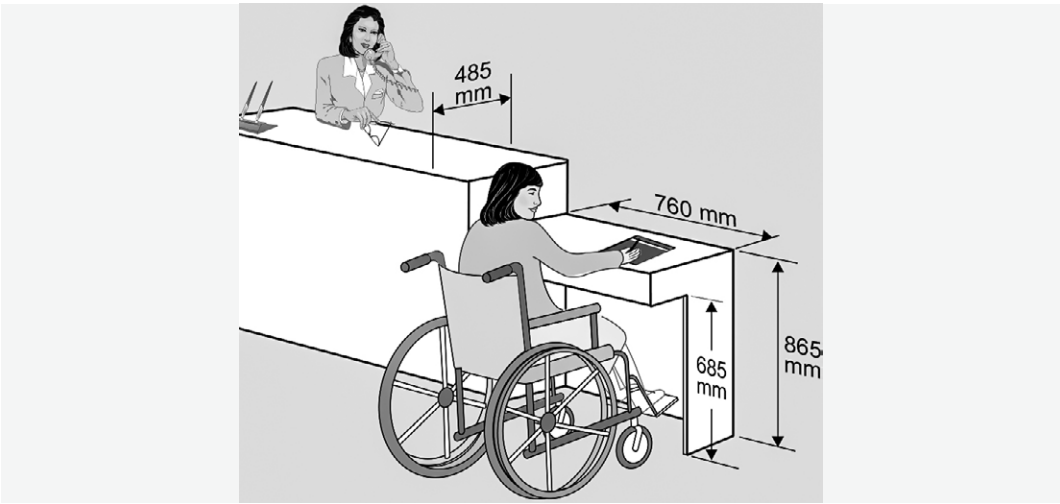

Source: RBQ. 2010. Normes de conception sans obstacles. Code de construction du Quebec. Canada.

4

Circulation

WORLD BANK GROUP

4.A. Doors - Width and Operability

- Doors need to be large enough for a wheelchair to easily pass through but also must allow space for the person who is moving it to not get his or her hands hurt rubbing or knocking against the sides of the doorframe.
- The ISO defines this minimum width as 80 cm, but other standards require 85/90 cm. Whenever possible, the standards that are more advantageous for persons with disabilities should be followed.
- For double-leaf doors, the single operable leaf (the one with the handle) should comply with minimum width standards (regardless of the total width of the double door).

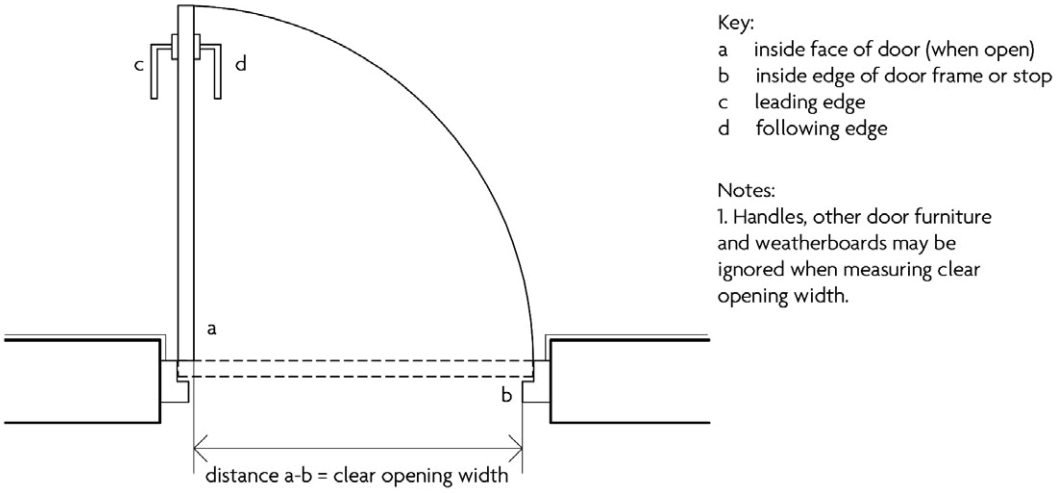

© Crown Copyright 2015 (HM Government, The Building Regulations 2010, Access to and use of buildings, volume 1. Dwellings. Diagram 1)

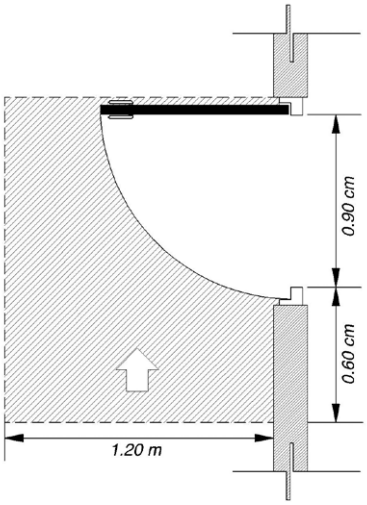

© IBNORCA (Norma Boliviana. 2013. NB 1220013. Accesibilidad de las personas con discapacidad al medio físico - Edificios - Puertas accesibles. Figura 6.)

- A ledge between the latch and the adjacent wall (if any) has to be kept free, in order to facilitate approaching and operating the door, especially for persons using a wheelchair, crutches, or other walking aids. The width of this ledge varies from standard to standard--but naturally the wider the better.
- Doors should also be easy to operate, and not require too much effort.

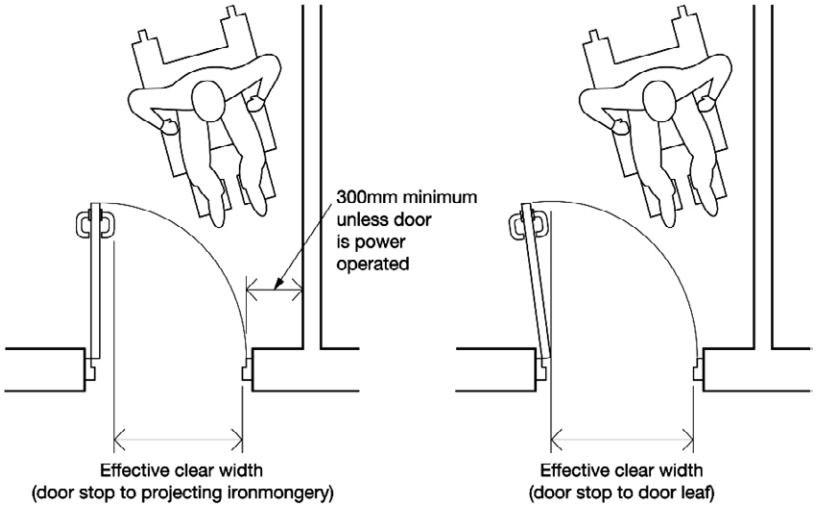

© Crown Copyright 2021 (HM Government, The Building Regulations 2010, Access to and use of buildings, volume 2. Buildings Other than Dwellings. Diagram 9)

4.B. Doors - Thresholds

- Small thresholds underneath internal and external doors are allowed (if needed) but they have to be minimal, beveled, and they cannot represent an obstacle for persons with visual or mobility impairments, or persons using a wheelchair.
- Thresholds below doors should also be in a color that contrasts with the color of the floor, to avoid becoming a tripping hazard for persons with low vision.

4.C. Doors - Handles and Fittings

- Door handles, locks, bells, etc. should be easy to identify and maneuver regardless of a person's dexterity.
- Lever-type or vertical handles are generally recommended; knob handles are discouraged because they do not offer enough grip, and they require dexterity to be used. Also, some persons with amputations cannot use them.

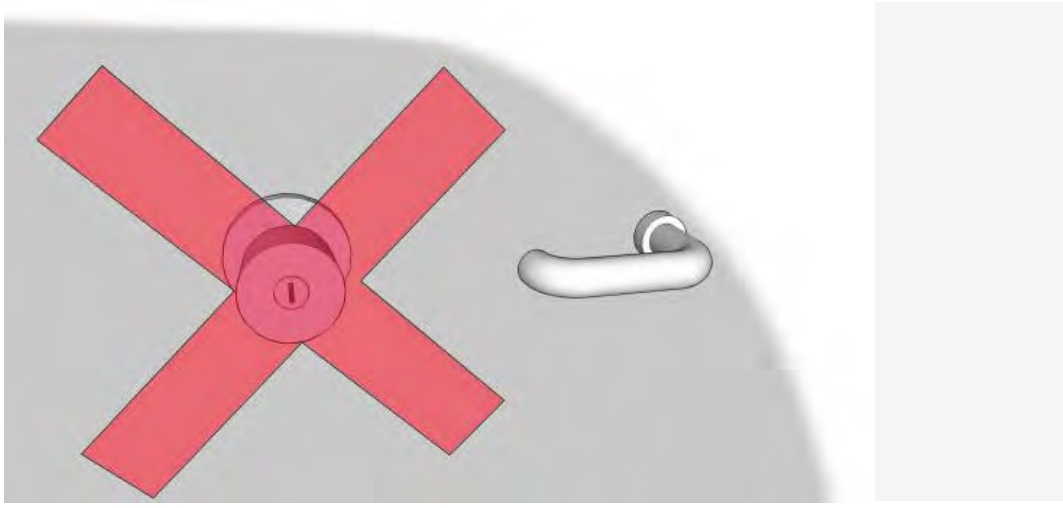

© Handicap International – French Section Handicap International. 2008. How to build an accessible environment in developing countries. Manual #1 – Introduction & Accessibility standards. Cambodia

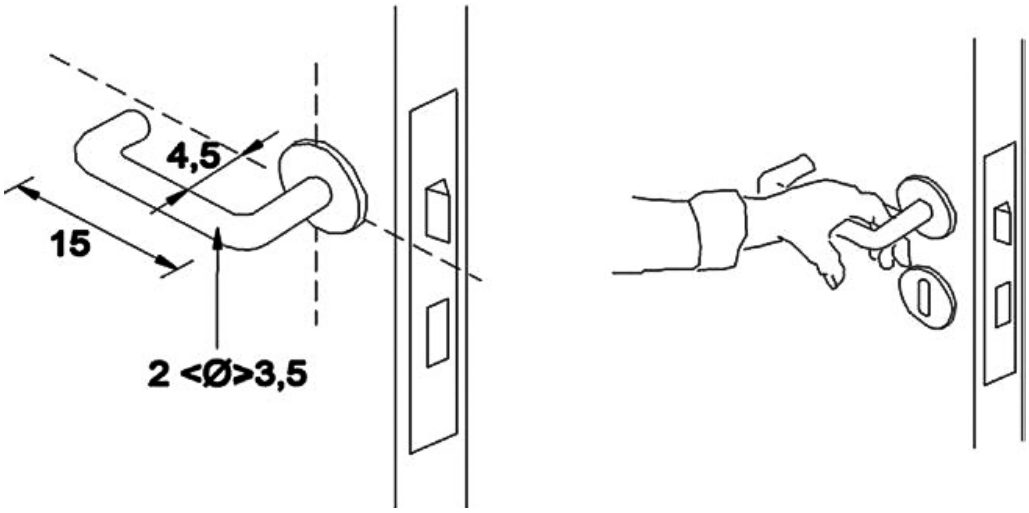

© IBNORCA (Norma Boliviana. 2013. NB 1220014. Accesibilidad de las personas con discapacidad al medio físico - Equipamientos - Dispositivos de accionamiento. Figura 2.)

- Handles and locks, like all other fittings, should be at a comfortable height for persons of short stature, children, persons using a wheelchair, etc.

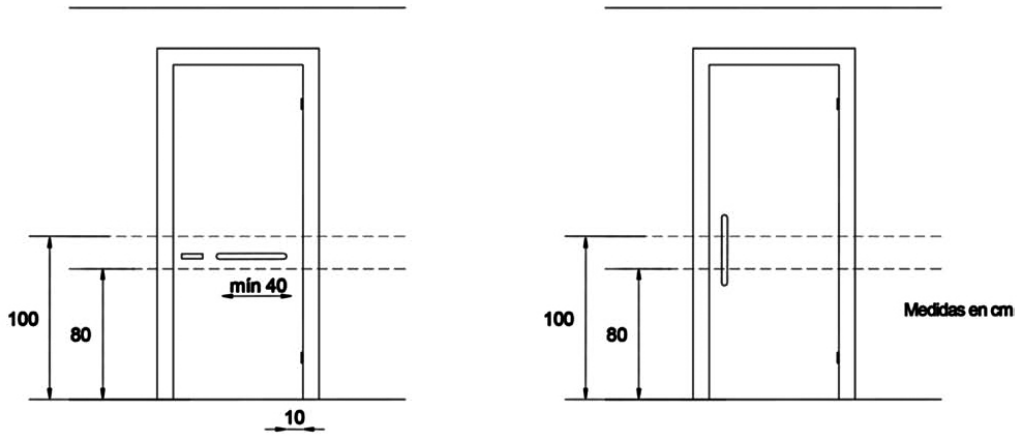

© IBNORCA (Norma Boliviana. 2013. NB 1220014. Accesibilidad de las personas con discapacidad al medio físico - Equipamientos - Dispositivos de accionamiento. Figura 3.)

4.D. Corridors / Pathways

Internal passages in buildings, and outdoor pavements and pathways should be able to accommodate multiple persons walking in opposite directions at the same time, including persons using wheelchairs. The recommended width of pathways depends upon the expected frequency of traffic, and also on locally adopted accessibility standards.

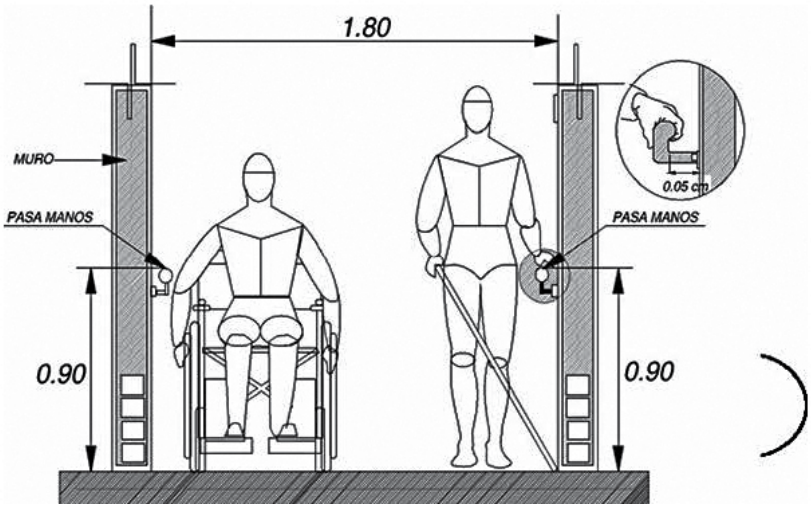

© IBNORCA (Norma Boliviana. 2013. NB 1220003. Accesibilidad de las personas con discapacidad al medio físico. Edificios y espacios urbanos - Equipamientos - Rodapiés, pasamanos, barandas y agarraderas. Figura 6.)

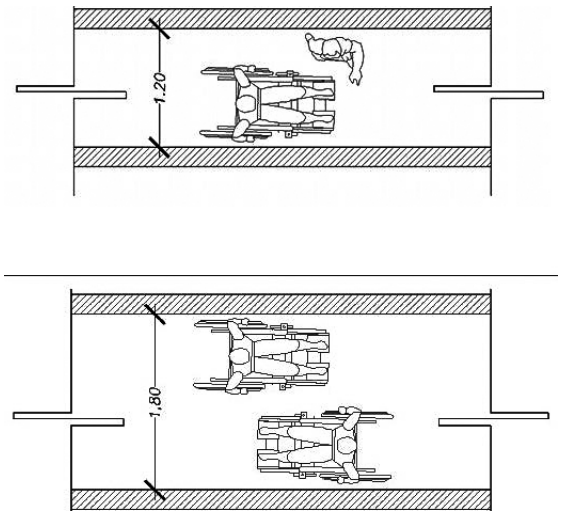

© IBNORCA (Norma Boliviana. 2013. NB 1220004. Accesibilidad de las personas con discapacidad al medio físico - Edificios - Pasillos y galerías - Características generales. Figura 2.)

- Floors and walls should be anti-glare and slip-resistant in both wet and dry conditions.
- Walls should have a smooth finishing, so they will not hurt persons who are blind and might inadvertently rub against them.
- Sharp wall corners along corridors (for example, window openings) should also be protected with anti-bump corner guards.

4.E. Stairs - Suspended Obstacles

- There should be no obstacles protruding horizontally in the hallways, or hanging from the ceiling at a low height.
- The lowest allowed ceiling height varies slightly from standard to standard.
- Persons who are blind, or who have visual impairments, must be prevented from bumping into obstacles such as suspended staircases, by closing the space underneath.

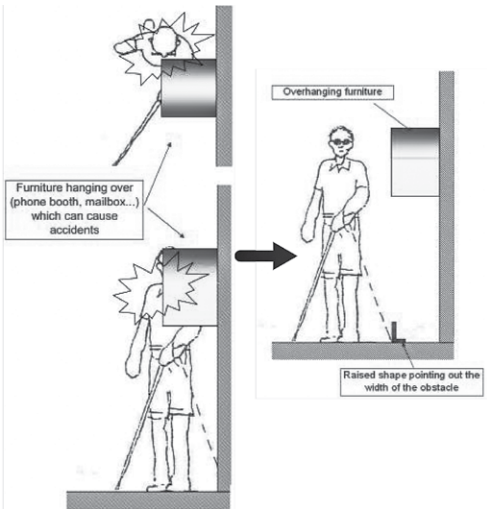

© Handicap International – French Section Handicap International. 2008. How to build an accessible environment in developing countries. Manual #1 – Introduction & Accessibility standards. Cambodia

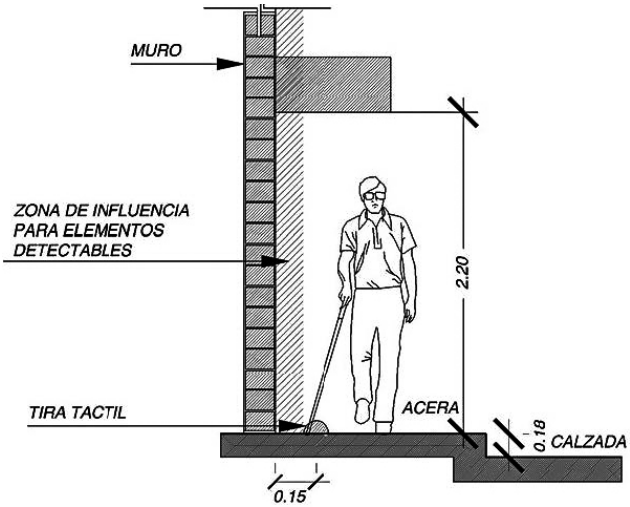

© IBNORCA (Norma Boliviana. 2013. NB 1220007. Accesibilidad de las personas con discapacidad al medio físico - Edificios - Vías de circulación peatonales horizontales. Figura 2.)

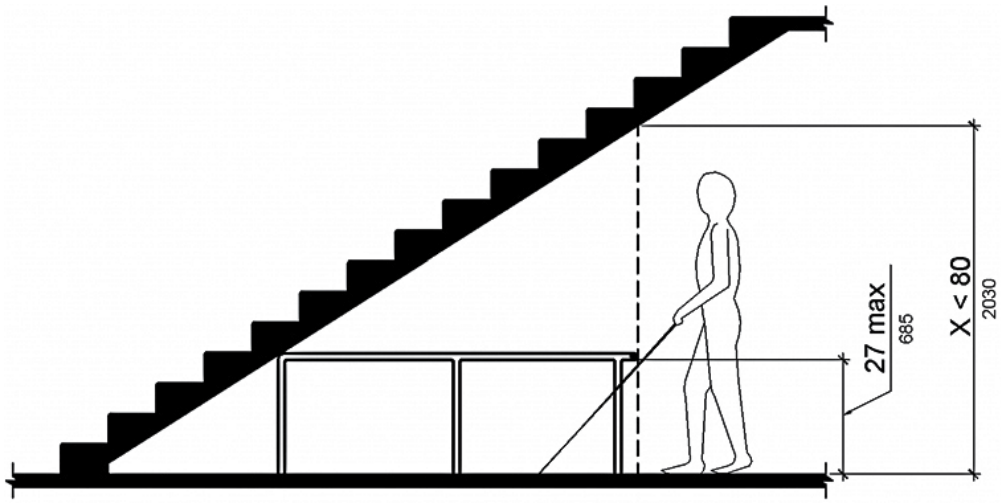

Source: Department of Justice. 2015. 2010 ADA Standards for Accessible Design. United States (Figure 307.4)

4.F. Stairs - Design

- Like ramps, stairs should have a dual-height handrail on both sides; it should extend beyond both the beginning and the end of the steps, to help guide persons who are blind toward the stairs. Some standards do not prescribe double-height handrails, but this is a good practice to follow whenever possible.
- At the beginning and at the end of handrails there should be a plate with information in braille about the floor, the services available nearby, and so on.

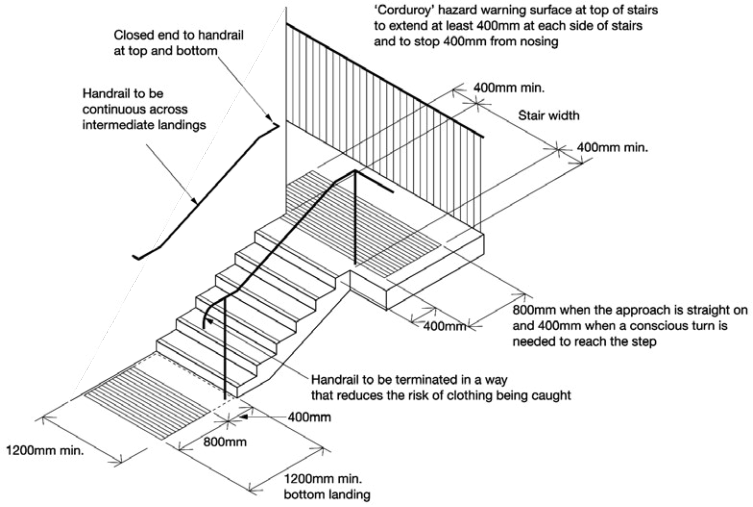

© Crown Copyright 2021 (HM Government, The Building Regulations 2010, Access to and use of buildings, volume 2. Buildings Other than Dwellings. Diagram 4)

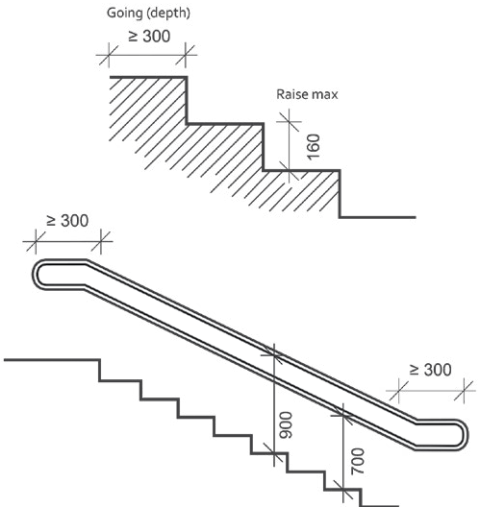

Source: The Threshold Association. 2014. Accessibility Guide. Finland.

4.G. Stairs - Tactile Warnings

- On the floor at the beginning and at the end of each flight of steps (including on landings) there should be a tactile warning for persons who are blind.
- There should be a gap between the tactile strip and the first step, so that persons who are blind will have sufficient warning before the step begins and will thus avoid stumbling and falling. The width of this gap varies slightly from standard to standard.

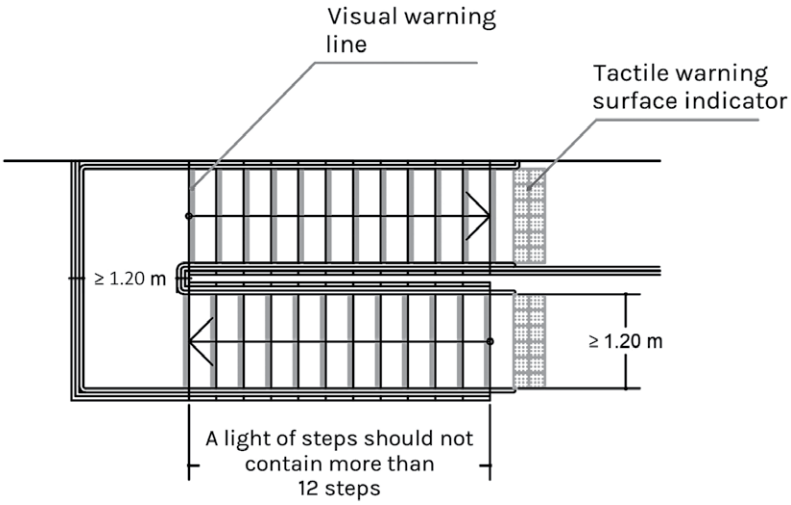

Source: World Bank. 2020. Urban accessibility design guideline incorporating universal accessibility into infrastructure planning and design. Figure 5.2.

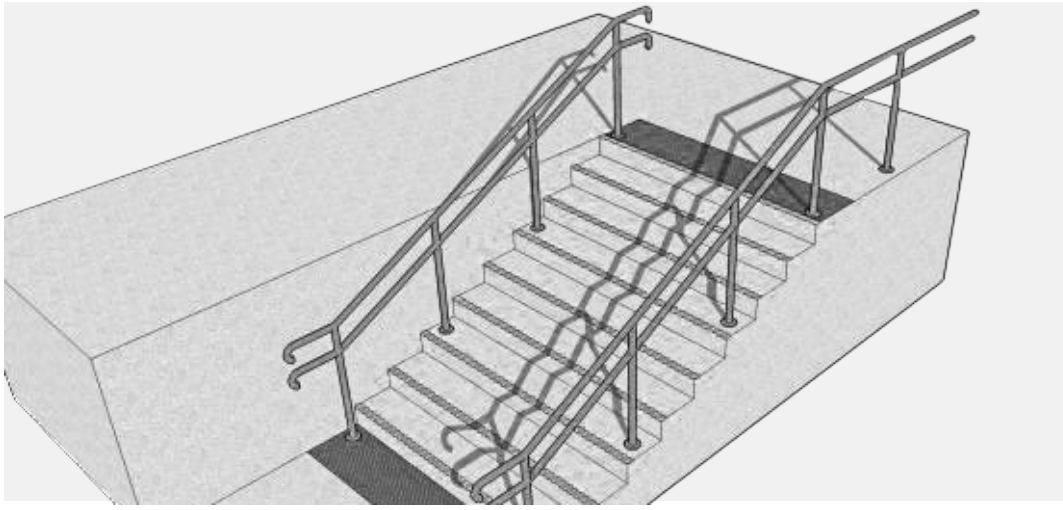

© Handicap International – French Section Handicap International. 2008. How to build an accessible environment in developing countries. Manual #1 – Introduction & Accessibility standards. Cambodia

4.H. Stairs - Step Nosing

- The “nose” of steps (that is, both the horizontal and the vertical edges of each step) should be marked in a contrasting color to facilitate going up and down for persons who are blind or who have visual impairments.
- The horizontal part of the nose should also be made with a tactile material in relief, so as to protect people from slipping.

Source: shutterstock_248794282

© Crown copyright, 2008, 2010, 2011 and 2015 (Department of Transport. 2015. Design Standards for Accessible Railway Stations. A joint Code of Practice by the Department for Transport and Transport Scotland. Figure Q1.1)

- Protruding noses at the edge of steps should be avoided: persons with mobility impairments might find it difficult to climb such steps, since their feet could get stuck under the extended part.

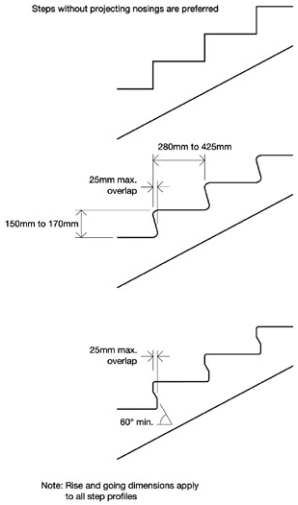

© Crown Copyright 2021 (HM Government, The Building Regulations 2010, Access to and use of buildings, volume 2. Buildings Other than Dwellings. Diagram 6)

4.I. Stairs - No Open Risers

- Staircases with open risers are to be avoided: some persons with disabilities might get confused or be afraid to use them.
- In the world of architecture, this type of staircase is used to give more “transparency” to the space. However, stairs like these generate stress in some people, especially those with visual disabilities, since a foot and/or cane can slip inadvertently into the open spaces between the steps. For the visually impaired, who may be used to sliding their feet and using them to feel their way, closed risers feel much safer.

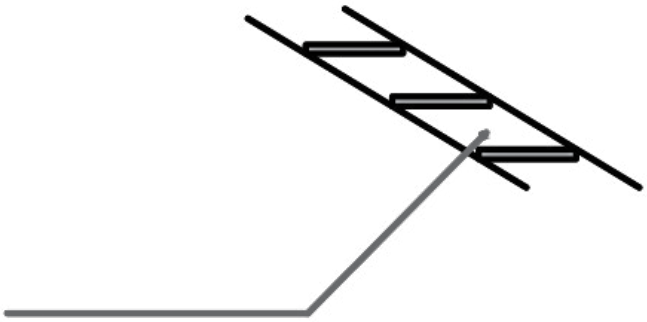

The raiser of a step should not be open

Source: World Bank. 2020. Urban accessibility design guideline incorporating universal accessibility into infrastructure planning and design. Figure 5.2.

4.J. Safe Places

- An area separate from the general floor area by a fire separation having a fire-resistance rating at least equal to that required for an exit, that is smoke protected and served by an exit or a firefighter’s elevator. It should also be a size that allows a minimum floor space of 850 x 1200 mm per non-ambulatory occupant, with no fewer than 2 such spaces.

4.K. Elevators / Lifts

- Mechanized carriers for places where ramps are not possible, or for multistory buildings (that is, elevators) should be near the main entrance and clearly marked;

they should ascend to each floor at a central point; and should allow people to reach every floor without having to use stairs.

Ideally an elevator should be large enough to allow a U-turn in a wheelchair. The minimum standard dimensions for accessible elevators do allow a person using a wheelchair to enter and exit the elevator independently. However, they do not provide enough space that a person using a wheelchair can perform a U-turn inside the elevator; so he or she has to move backwards either while getting in or getting out of the elevator. For this reason, the keyboard must be placed in the center of one side of the cabin, so that it is easily reachable in either case.

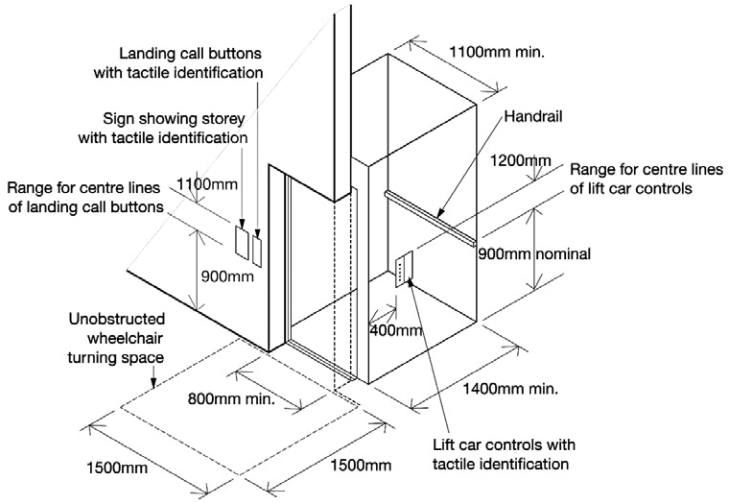

© Crown Copyright 2021 (HM Government, The Building Regulations 2010, Access to and use of buildings, volume 2. Buildings Other than Dwellings. Diagram 11)

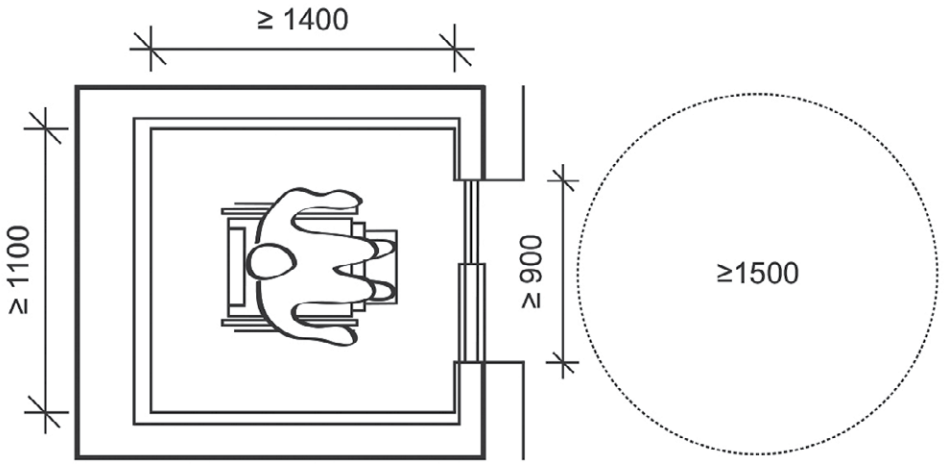

Source: The Threshold Association. 2014. Accessibility Guide. Finland.

4.L. Elevators - Control Panels

- Elevators must have a tactile keyboard with numbers and symbols in relief and/or in braille, so that persons who are blind can easily use them. Touch-screen keypads should be avoided as a general rule, including in elevators. Emergency buttons should also be tactile.
- Control panels should be placed at a height that is convenient for persons using a wheelchair, persons of short stature, or children.
- There should also be audio alerts that inform passengers which floor the cabin is on; whether it is about to go up or down; when the door is about to close, and so on.

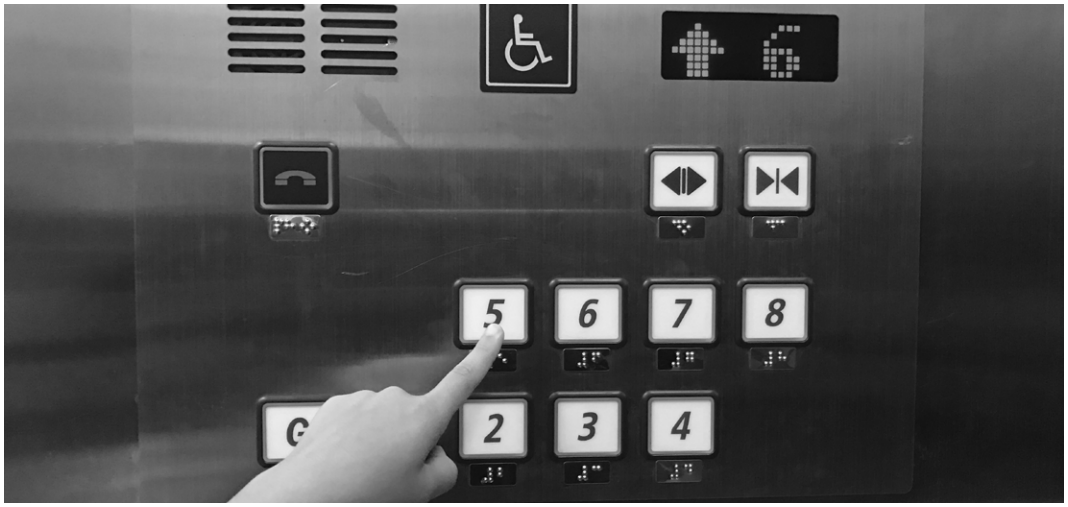

Source: shutterstock_565786084

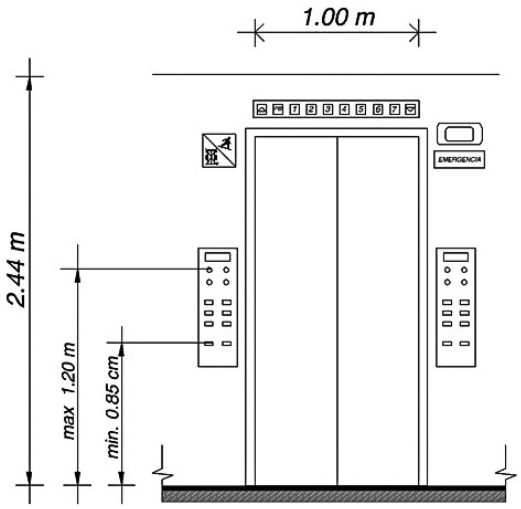

© IBNORCA (Norma Boliviana. 2013. NB 1220006. Accesibilidad de las personas con discapacidad al medio físico - Edificios - Ascensores. Figura 1.)

4.M. Elevators - Elevating Platformst

- If at the elevated entrance of a building it's impossible to build a ramp, an elevating platform that can lift a person using a wheelchair from the street level to the landing or entrance level should be installed.
- Elevating platforms should be safe for persons who use them; in particular, they should have handrails and/or other means to prevent falls.
- Command buttons should be easy to reach and press, and there should be an emergency interphone to be activated in case of problems.
- There are different types of elevating platforms for different heights.

4.N. Wayfinding - Signposting Panels

- Signposting panels that indicate the function of a room should be installed close to the door at an appropriate height. They should be large and easy to read, with contrasting color and text as well as informative symbols and pictograms.
- The fonts should be sans serif; they should contrast with the surface; and should be anti-glare and high relief.
- Signposting panels should also have tactile or braille information.
- It is a good practice to place a hand gel dispenser close to tactile panels, so that persons who are blind can disinfect their hands after touching the signs.

Source: Mari Helena Koistinen

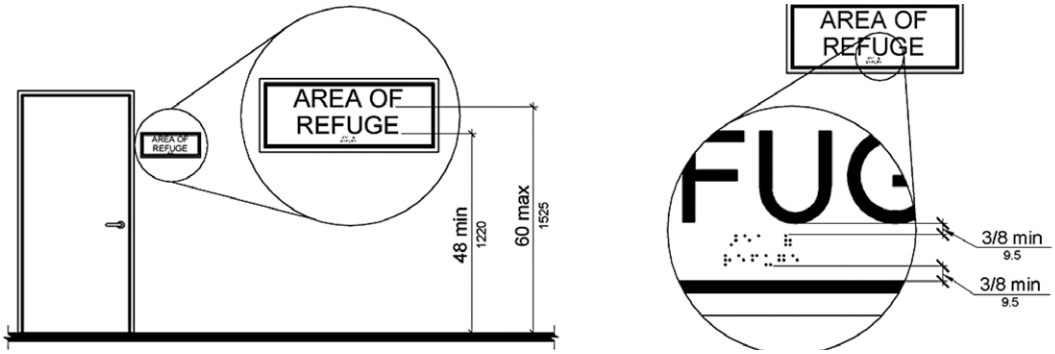

Source: Department of Justice. 2015. 2010 ADA Standards for Accessible Design. United States (Figure 703.3.2 and 703.4.1)

4.O. Wayfinding - Directional Panels

- Panels guiding people toward the services they are seeking should have large arrows, clear pictograms, and large-print text information in two languages.
- A clearly configured wayfinding system in a building is very important in order for people to be able to orient themselves, and find their way independently.

Source: Mari Helena Koistinen

© Crown copyright, 2008, 2010, 2011 and 2015 (Department of Transport. 2015. Design Standards for Accessible Railway Stations. A joint Code of Practice by the Department for Transport and Transport Scotland. Figure K2.1)

- The position of directional signs (inside a building, in a courtyard, in an urban area, etc.) is very important for providing useful information all along the way.
- Signs should be clearly visible from different directions, and visible even in crowded halls or pathways.
- Signs should be clearly readable at nighttime as well.

4.P. Tactile Walking Surface Indicator (TWSI)

- A tactile surface allows persons who are blind and use a cane to find their way around open spaces and between relevant landmarks (entrance doors, pedestrian crossings, elevators, staircases, etc.).
- Tiles should be differentiated (and used in a consistent manner) if they are meant to *guide* people through a space, or to alert them to changes in direction, potential hazards, or relevant landmarks.
- Tactile tiles (or strips) should also be in a color that contrasts with the color of the floor, so as to be easier to see for persons with low vision.

Source: Fernando Alonso López. (World Bank. 2020. Urban accessibility design guideline incorporating universal accessibility into infrastructure planning and design.)

- Especially in outdoor spaces directional pathways are often suppressed, and only the alert tiles are in place (before a pedestrian crossing or a curb cut, for example).

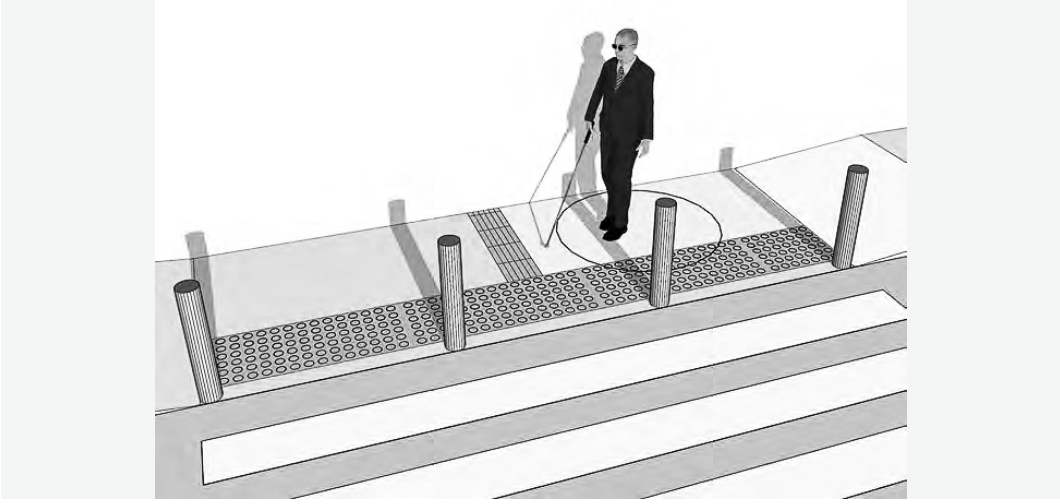

Source: Acceplan Accesibilidad S.L. (World Bank. 2020. Urban accessibility design guideline incorporating universal accessibility into infrastructure planning and design. Figure 5.16)

5

Use

WORLD BANK GROUP

5.A. Electric Fittings

- Switches, sockets, and all other fittings should be at an appropriate height so that persons of short stature or those using a wheelchair can easily reach them.
- They should also be in a color that contrasts with the color of the wall, so that persons with low vision can easily find them. In general, they should be placed where people are most likely to find them (on the side of a door, in the corner of a room, etc.).
- Recommendations slightly vary depending upon the standard being used.

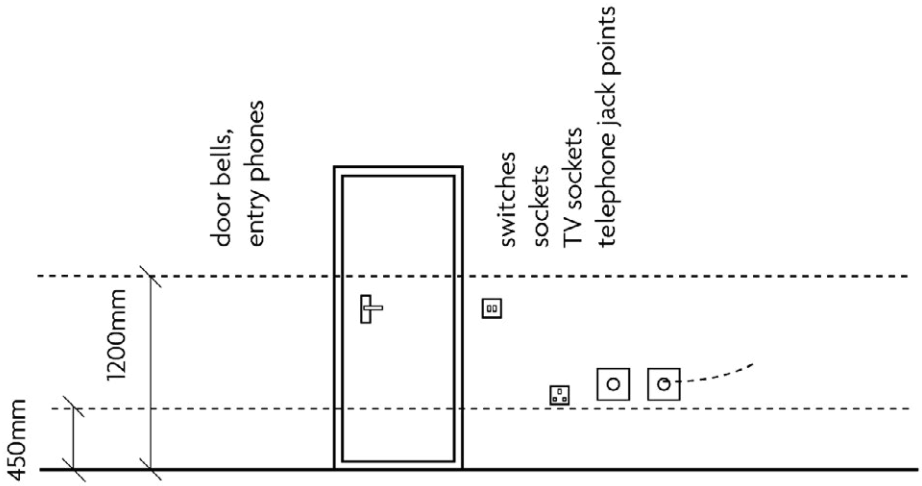

© Crown Copyright 2015 (HM Government, The Building Regulations 2010, Access to and use of buildings, volume 1. Dwellings. Diagram 1.5)

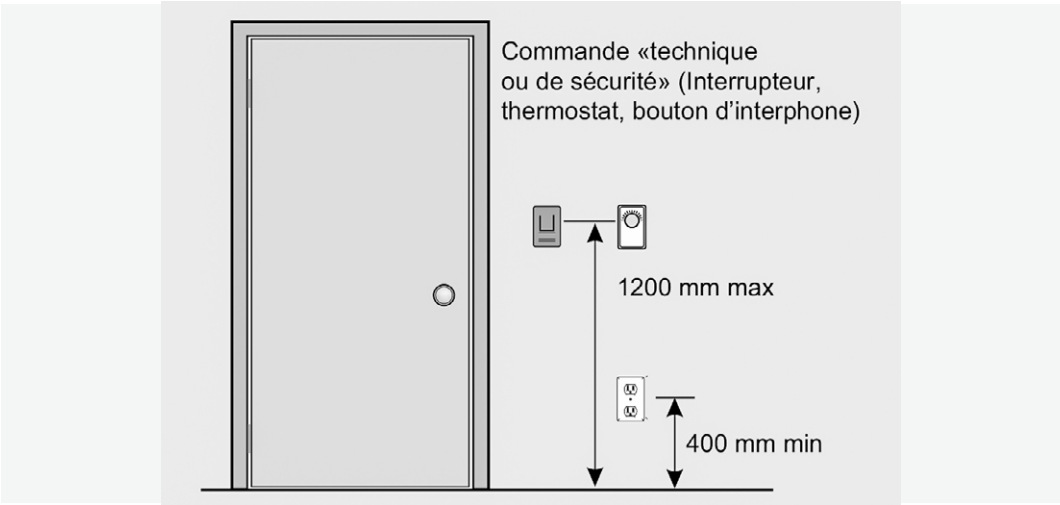

Source: RBQ. 2010. Normes de conception sans obstacles. Code de construction du Quebec. Canada.

5.B. Windows - Operability

- Manual controls for windows, shutters, and other hardware in a room should be easy for persons using a wheelchair, persons of short stature, and children to reach.
- They should also be operable for persons with limited dexterity or with amputations.
- In addition, such mechanisms should not require a lot of physical effort to be operated, and should include safety features.

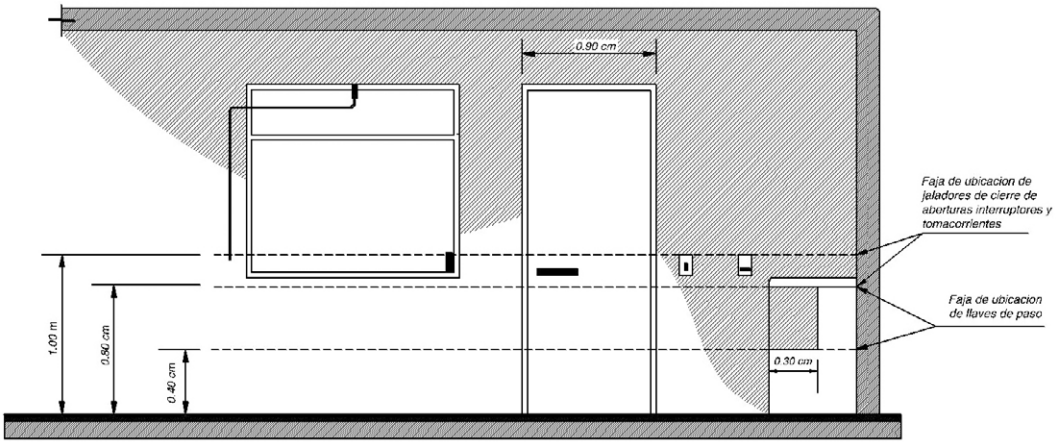

© IBNORCA (Norma Boliviana. 2013. NB 1220014. Accesibilidad de las personas con discapacidad al medio físico - Edificios - Cocinas accesibles. Figura 1.)

5.C. Hearing Enhancements

- The installation of an induction loop amplifier provides people who are hard of hearing and who are standing inside the magnetic loop, with access to a speaker's voice from a microphone directly into their hearing aids (when set in the "T" position), thus removing all the surrounding ambient noise.
- The areas where the induction loop is installed, for example in a theater, a meeting room, etc., should be marked with the induction loop symbol.
- Hearing enhancement systems should also be installed at reception desks, information booths, and other such places.

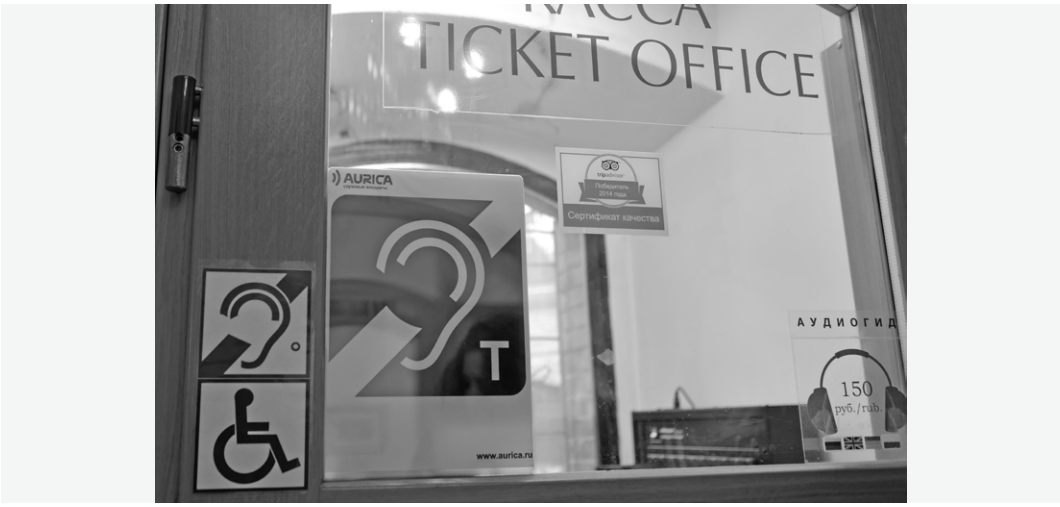

Source: shutterstock_1060050104

5.D. Toilets - Ambulant Persons

Accessible toilet cubicles for ambulant persons can be much smaller than accessible toilets for persons using a wheelchair; but they need to be equipped with horizontal grab rails to facilitate sitting on the toilet and vertical rails for standing up after use. Recommendations vary slightly from standard to standard.

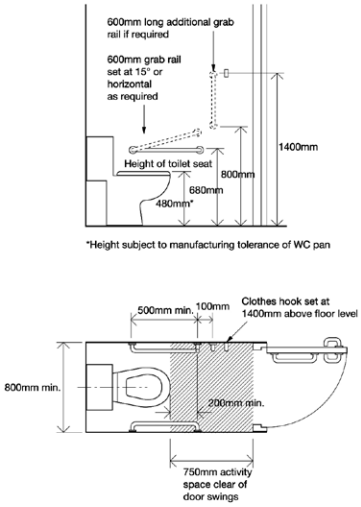

© Crown Copyright 2021 (HM Government, The Building Regulations 2010, Access to and use of buildings, volume 2. Buildings Other than Dwellings. Diagram 21)

5.E. Toilets - Design

- Accessible toilets can have different layouts, allowing for either a diagonal or a parallel use; the latter is generally more comfortable. In this case, a clear space should be left on the side of the toilet seat.
- There must be a clear circular space of 150 cm to allow for maneuvering and U-turning a wheelchair.
- The toilet paper roll, the cord to activate the alarm, and all useful fittings should be reachable from the toilet seat.

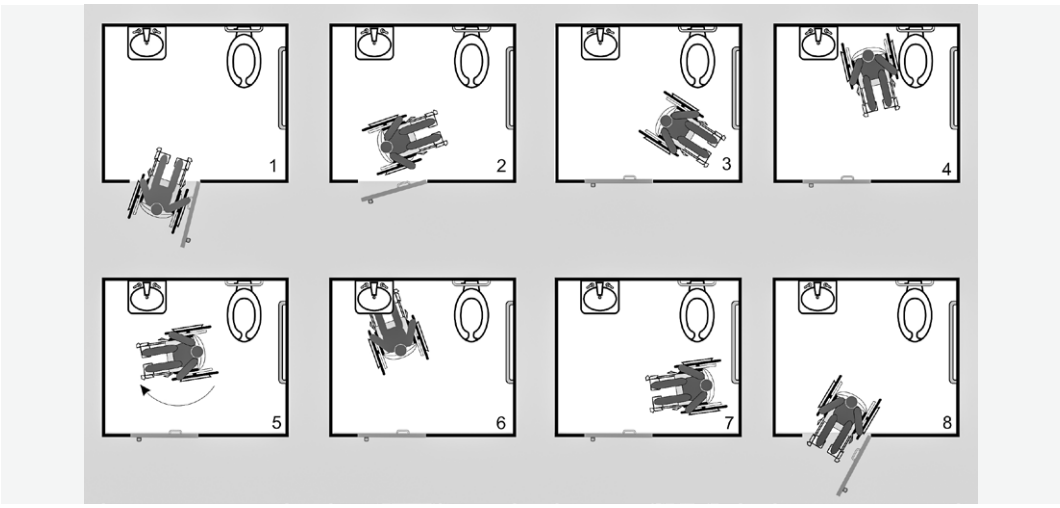

Source: RBQ. 2010. Normes de conception sans obstacles. Code de construction du Quebec. Canada.

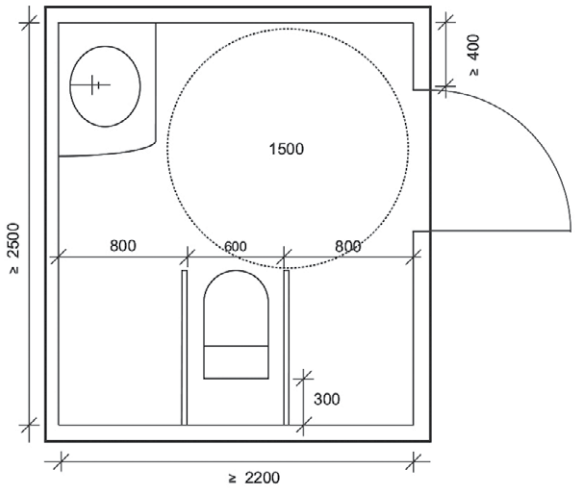

Source: The Threshold Association. 2014. Accessibility Guide. Finland.

5.F. Toilets - Grab Rails

- A horizontal grab rail should be installed on the wall next to the toilet seat: this helps a person using a wheelchair transfer onto the toilet seat and back to the chair.
- There should also be a vertical grab bar that helps persons with mobility impairments to stand up after using the toilet. Requirements vary slightly from standard to standard.
- A drop-off grab rail should also be installed on the wall on the other side of the toilet seat, to support persons with mobility impairments.
- Grab rails must be properly fixed so that they can hold the weight of a person without collapsing.

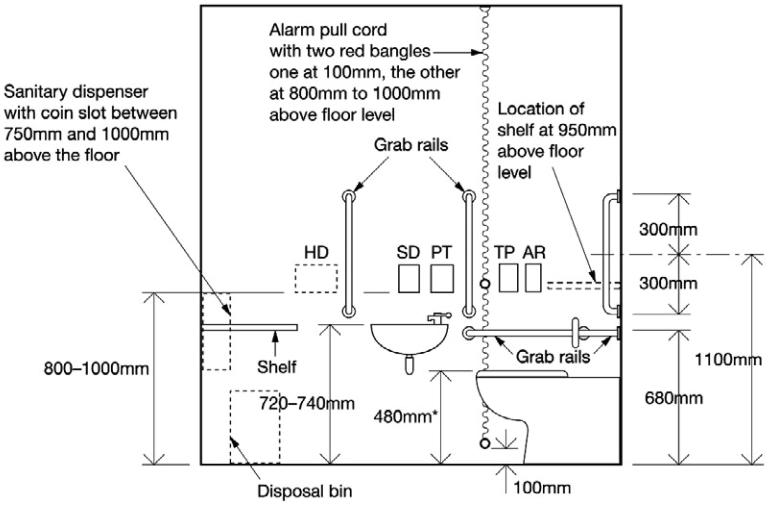

© Crown Copyright 2021 (HM Government, The Building Regulations 2010, Access to and use of buildings, volume 2. Buildings Other than Dwellings. Diagram 19)

5.G. Toilets - Taps

- Washbasin taps should be the lever type (not the screw-down type), so as to be easily usable with closed fists, and regardless of the dexterity of a person.
- Screw-down tap handles should always be avoided because they are difficult for persons with limited dexterity to use, especially persons with upper-limb amputations.

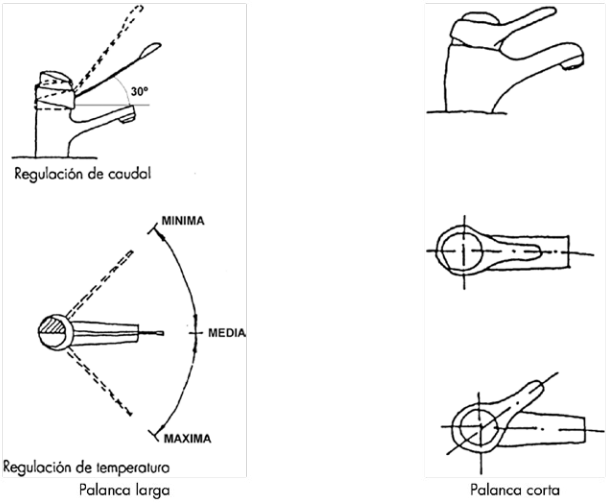

© IBNORCA (Norma Boliviana. 2013. NB 1220009. Accesibilidad de las personas con discapacidad al medio físico - Equipamientos - Grifería - Criterios de elección. Figura 2.)

5.H. Toilets - Toilet Seats

- Accessible toilets should be equipped with seats and preferably positioned in a corner to allow a parallel approach. (Squat toilets should be avoided).
- Toilet seats should be equipped with grab rails and they should be at a comfortable height in order to facilitate the transfer to and from a wheelchair.
- Requirements vary slightly from standard to standard.
- Flush mechanisms should be either the button type or the lever type (avoid pulling types) in order to be easy to use regardless of the dexterity of a person.

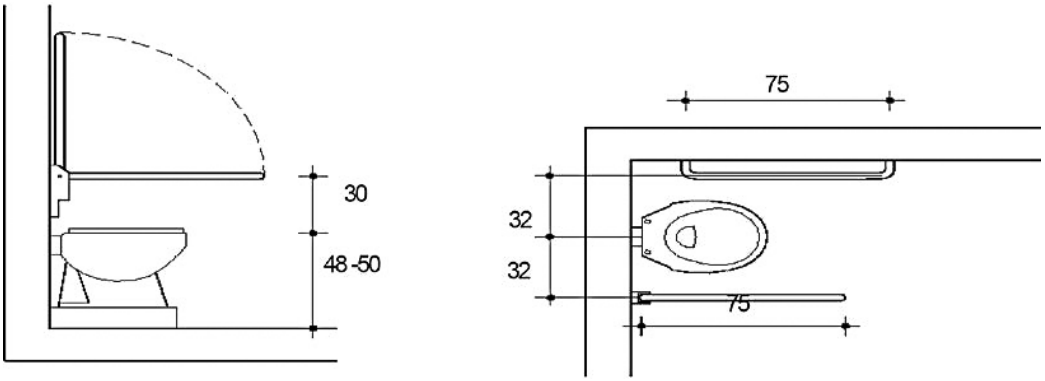

© IBNORCA (Norma Boliviana. 2013. NB 1220011. Accesibilidad de las personas con discapacidad al medio físico - Edificios y espacios urbanos - Servicios sanitarios accesibles. Figura 2.)

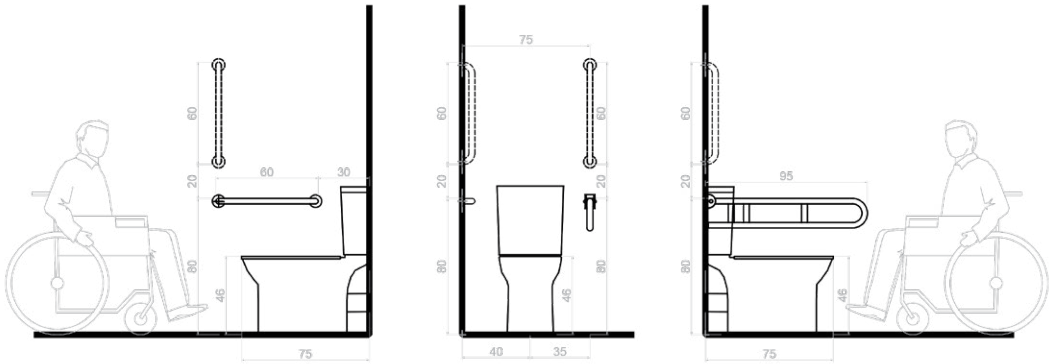

Source: Erika Trabucco

5.I. Toilets - Washbasins

- Washbasins should be suspended from the wall and without a column, so that persons using a wheelchair can easily get close to the tap by sliding the wheelchair underneath the sink.
- Taps should be easy to use and to reach; it is sometimes recommended to add a vertical rail on the side of the basin so that standing persons can hold onto it if they are concerned about slipping on a wet floor.

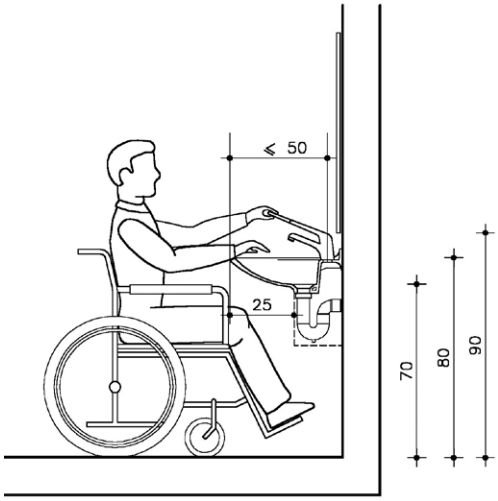

© IBNORCA (Norma Boliviana. 2013. NB 1220011. Accesibilidad de las personas con discapacidad al medio físico - Edificios y espacios urbanos - Servicios sanitarios accesibles. Figura 4.)

5.J. Toilets - Doors

- Toilet doors should open outward, so as not to reduce internal maneuvering space, and to make it easier to rescue a person who has fallen inside when the door is closed.
- They should have a sliding or rotating lock, easy to use with a closed fist, and a lever-type handle.
- They should have a hook for hanging things at an appropriate height, and an extra horizontal handle/grab rail, to facilitate opening and closing the door for a person using a wheelchair.

5.K. WASH - Access Paths

- The access to a water point or a latrine has to be firm (no sand, gravel, grass, or muddy soil). It should also be flat and even, with no holes or obstacles, and wide enough to allow the passage of a person using a wheelchair. The sides should be marked with a raised curb or another form of side relief to facilitate circulation for persons who are blind or have low vision.
- Latrines and water points should be close to the household; If the water point is a well, it has to be dug far away from the latrine's pit (see SPHERE standards for details).
- Public latrines should be clearly signposted so that people can easily find them.

Source: Heinonen, V. D4-Network Ltd (Guzmán, N., Huuhtanen, S., Katsui, H., Kilpelä, N., Koistinen, M., Pesola, K. and Tuure, T. Inclusive WASH Activities in the Global South. Picture 3)

Source : Remissa Mak (WaterAid)

5.L. WASH - Latrines for Ambulant Persons

- Accessible latrines for ambulant persons can be much smaller than those for persons using a wheelchair, but they should be equipped with horizontal grab rails to facilitate sitting on the toilet seat chair (horizontal rail) and vertical rails for assistance in standing up after use.
- If there are steps to reach the latrine, they should be regular, flat, anti-slip, and provided with dual-height handrails on both sides, with the noses of the steps in a contrasting color.
- ***For further details please refer to the "toilet" and "stairs" part.***

Source: Handicap International Sri Lanka (2004)

5.M. WASH - Latrine Entrances

- Regardless of the type, latrine entrances need to be wide enough for a person using a wheelchair to easily go through, but also wide enough that the person moving it will not hurt his/her hands (and elbows) by bumping them against the internal sides of the doorframe.
- The ISO defines this minimum width as 80 cm; other standards are more advantageous for persons with disabilities, at a required 85/90cm.
- ***For further details please refer to the part about "doors."***
- Entrances should not have thresholds; if they must have them, the thresholds should be short and beveled, so as not to be an obstacle for persons with mobility or visual impairments.

5.N. WASH - Latrine Doors

- Latrine doors should open outwards, so as not to reduce internal maneuvering space, and to make it easier to rescue a person who has fallen inside when the door is closed.
- They should have a sliding or rotating lock that is easy to use with a closed fist, and a lever-type handle.
- They should have a hook for hanging things at an appropriate height, and an extra horizontal grab rail, to facilitate opening and closing the door for persons using a wheelchair.
- ***For further details please refer to the part about "toilets".***

5.O. WASH - Squat Latrines

- In squat-type latrines, grab rails should be fixed on the two sides, self-standing, or attached to the walls, in order to provide support for persons with mobility impairments while they are crouching down, and to help them get up again.
- If the configuration of the latrine allows it, movable toilet seats can also be used by persons who have difficulties in squatting, or persons using a wheelchair.

Source: Heinonen, V. D4-Network Ltd (Guzmán, N., Huuhtanen, S., Katsui, H., Kilpelä, N., Koistinen, M., Pesola, K. and Tuure, T. Inclusive WASH Activities in the Global South. Picture 4)

5.P. WASH - Latrine Seats

- Accessible latrines should be equipped with seats and preferably positioned in a corner to allow a parallel approach.
- The seats should be equipped with grab rails on both sides and they should be at a comfortable height to facilitate the transfer from and back to a wheelchair.
- Latrines should be large enough to allow persons using a wheelchair to maneuver.
- ***For additional details please refer to the part about "toilets".***

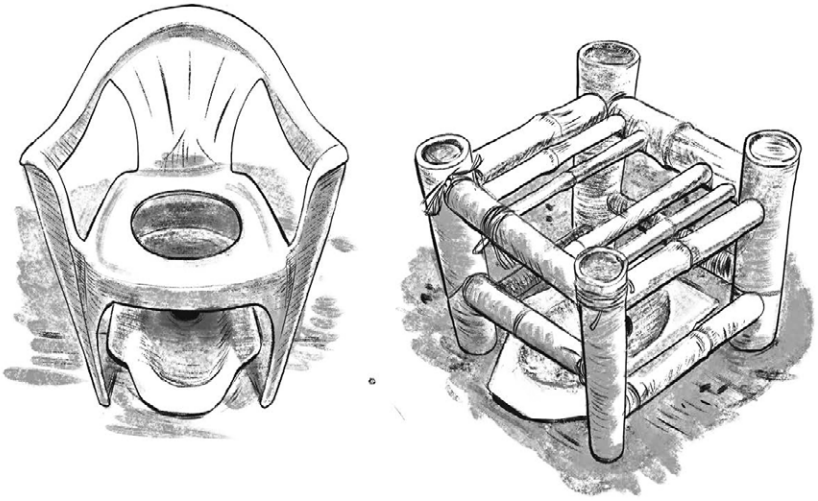

Source: Heinonen, V. D4-Network Ltd (Guzmán, N., Huuhtanen, S., Katsui, H., Kilpelä, N., Koistinen, M., Pesola, K. and Tuure, T. Inclusive WASH Activities in the Global South. Picture 5)

5.Q. WASH - Ramps and Aprons

- If a latrine or a source of water (hand pump platform, water tap, etc.) is raised from the ground level, a ramp should be provided to facilitate access for persons with mobility impairments and/or persons using a wheelchair. Ramps should have a gentle slope; a non-slip, firm, even surface; side curbs, and handrails.
- ***For additional details please refer to the part about "ramps".***
- If the pump is on a raised apron, the edges should be protected by a handrail, or at least marked by a raised curb, so that persons with visual impairments or those using a wheelchair do not risk falling off of the apron.

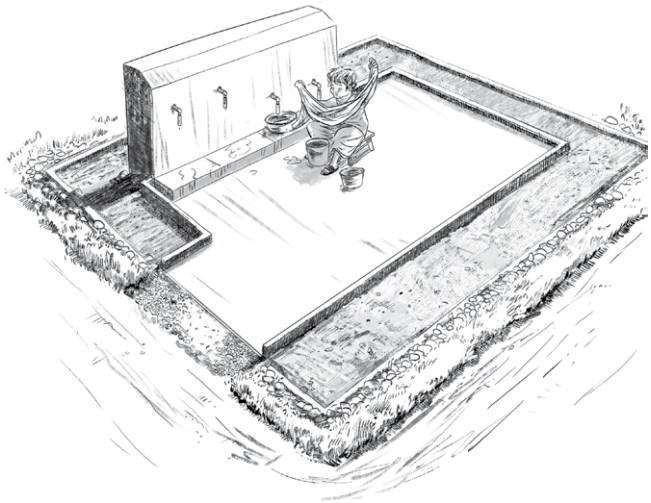

Source: Heinonen, V. D4-Network Ltd (Guzmán, N., Huuhtanen, S., Katsui, H., Kilpelä, N., Koistinen, M., Pesola, K. and Tuure, T. Inclusive WASH Activities in the Global South. Picture 9)

5.R. WASH - Water Outlets

- Water outlets should be easy to reach and operate by children, persons of short stature or with little strength, and those operating a wheelchair.
- The position and orientation of a hand pump should allow comfortable positioning, and possibly seating if it is needed.
- The handle of the hand pump should facilitate grabbing and holding regardless of the person's level of dexterity.

Source: Dennis Lupenga (WaterAid)

- Water taps should be lever-types, not screw-down rotating types, so that they can be easily operated with a closed fist.

5.S. Agriculture Adapted Tools and Equipment

- Agricultural tools can be adapted so that they are easier for persons with limited dexterity or mobility impairments to use.

Source: Masaru Goto (World Bank)

- Agricultural machinery can be adapted so that it can be used and driven by persons with disabilities.
- In cultivated fields it's important to ensure that there are accessible connecting paths between rows and cultivations. A person who has mobility impairments or is using a wheelchair is more likely to be able to work if the connecting paths are flat, even, with no grass, sand, muddy soil or gravel, and no obstacles or holes; and they are wide enough to maneuver for those using a wheelchair.
- The edges of the path should also be marked with side reliefs so that workers with visual impairments can safely walk along them.
- Some agricultural activities can be developed in adapted raised containers, so that persons with mobility impairments can reach the soil with greater ease.

Source: shutterstock_704418604

Inside back cover

WORLD BANK GROUP